PANA-03551

ORDER NO. AD8902015C8

Service Manual

Radio

RF-B65D

FM-LW-MW-SW ALL BAND RECEIVER

Color

(K)	Black Type

Area

Country Code	Area	Color
(EG)	F.R. Germany	(K)
(G)	Asia, Latin America, Middle Near East, Africa and Oseania.	

■ SPCIFICATIONS

Frequency Range:	FM; 87.5~108 MHz LW; 153~519 kHz MW; 522~1611 kHz (at 9 kHz step) 520~1610 kHz (at 10 kHz step) SW; 1,615~29,999 kHz .....For (G) area 1,615~26.1 kHz .....For (EG) area
Intermediate Frequency:	FM; 10.7 MHz AM 1st; 55,843 MHz AM 2nd; 450 kHz .....For (G) area 459 kHz .....For (EG) area
Sensitivity:	FM; 4 μV/50 mW output (−3 dB Limit Sens.) LW; 500 mV/m/50 mW output MW; 300 μV/50 mW output SW; 16 μV/50 mW output
Power Source:	Battery; 6 V (four UM-3 batteries for radio) 3 V (two UM-3 batteries for memory back-up) AC; with included AC adaptor 110~127/220~240 V, 50/60 Hz ..... For (G) area 220 V, 50 Hz ..... For (EG) area
Power Consumption:	5 W (with included AC adaptor)
Speaker:	8 cm PM dynamic speaker, 8Ω
Power Output:	550 mW (RMS Max.)
Jacks:	Earphone; 8Ω, Ø3.5 EXT. ANT. (LW/MW/SW); Ø3.5 DC IN; 6 V
Dimensions:	204.5 (W)×119 (H)×36.5 (D) mm
Weight:	625 g without batteries

Design and specifications are subject to change without notice.

National/Panasonic

Matsushita Electric Industrial Co., Ltd.
Central P.O. Box 288, Osaka 530-91, Japan

LOCATION OF CONTROLS AND COMPONENTS

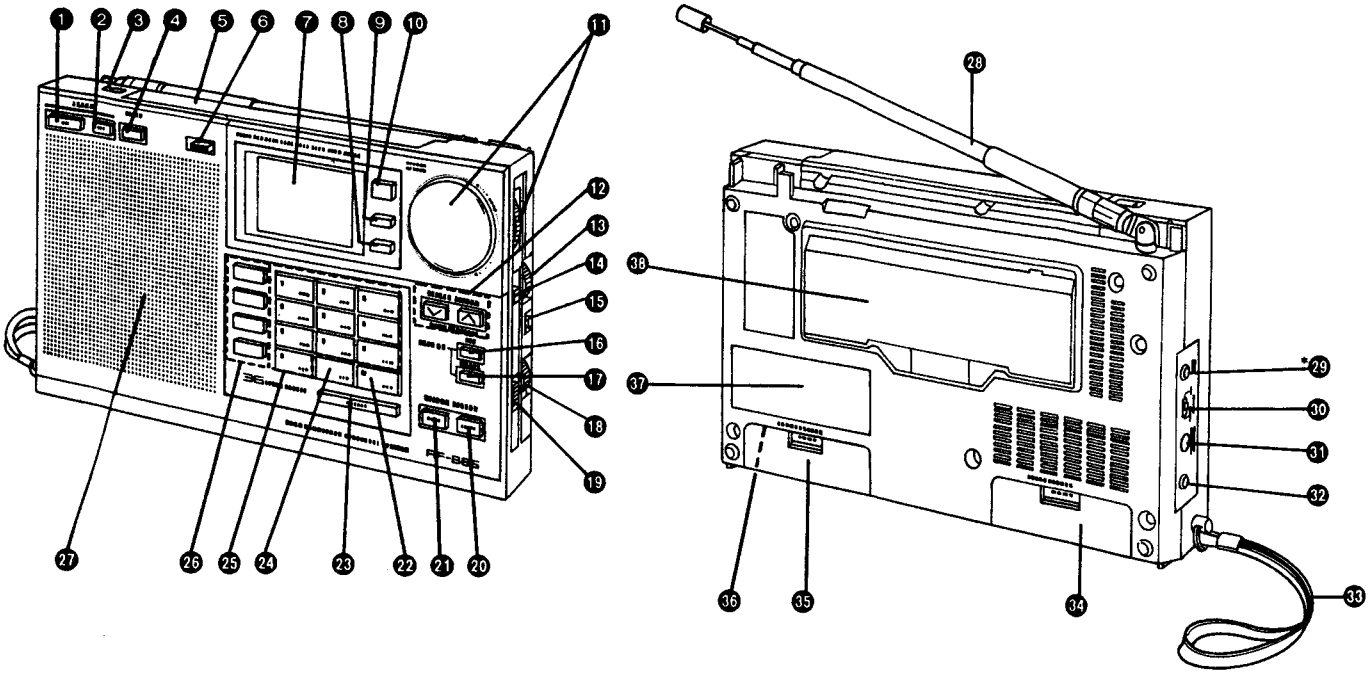

❶ **Power On Key (ON)**...(G)
Operation On Key (ON)..(EG)
❷ **Power Off Key (OFF)**...(G)
Operation Off Key (Off)..(EG)
❸ **Station Reminder Open Switch**
Use the switch to open the Station Reminder cover.

❹ **Sleep Key (SLEEP)**
Press the key to turn the radio off automatically in 60 minutes.

❺ **Station Reminder (STATION REMINDER)**
Attach the included Memory Channel Sheets to the Station Reminder. It is useful for Memory Tuning.

❻ **AM Mode Selector (AM MODE)**
When receiving the SSB (Single Side-Band), set to "SSB". For others, set to "NORMAL".

❼ **LCD Multi-Information Display**

❽ **Time Set Key (TIME SET)**
Press the key when setting a clock time.

❾ **Dual Time Set Key (DUAL TIME)**
This unit enables the dual clock time besides the normal clock time to be set. Press the key when setting the dual clock time, or selecting the display of the normal or dual clock time.

❿ **Display Select Key (CLOCK/FREQ)**
Press the key to select the frequency display or the clock display.

⓫ **Rotary Tuning Control (ROTARY TUNING)**

⓬ **Up and Down Keys (∨ • ∧)**
Press the Up Key (∧) or Down Key (∨) to make the frequency change up or down during Manual Tuning and Auto Scan Tuning. Or press to stop Auto Scan Tuning.

⓭ **Fine Tuning Control (FINE TUNE)**
When receiving the SSB, use this control for more precise tuning.

⓮ **Rotary Tuning Step Selector**
For Rotary Tuning, set the selector to "FAST" or "SLOW" to make the frequency change at your desired tuning steps. In "LOCK" position, Rotary Tuning cannot operate. So, the frequency being received will be locked, and cannot be drifted accidentally.

⓯ **Tone Selector (TONE)**

⓰ **Standby Time Set Key (SET)**
Press the key to set the time you want to turn the radio on automatically.

⓱ **Standby Time Cancel Key (CANCEL)**
Press the key to cancel the standby time.

⓲ **Volume Control (VOLUME)**

⓳ **Hold Switch**
Usually set the switch to the opposite direction of the arrow.
When it is set to the direction of the arrow, the operation of all the keys and the Rotary Tuning Control will be locked.
It is effective during both the radio-on and off.

⓴ **Meter Band Direct Access Key (METER)**
Press the key before calling the lowest frequency of the SW meter band including your desired station.

㉑ **Frequency Direct Access Key (FREQ)**
When you know the frequency of your desired station, press the key before entering the frequency number.

㉒ **Memory/Meter Band Key**
Use the key first when you preset the desired stations into each of the memory channels. This key also functions as the Meter Band Key, which can call the lowest frequency of a SW meter band.

㉓ **Enter Key (ENTER)**
After entering the frequency number of your desired station or the number of a clock time, press the key to begin receiving the broadcast of the station or to complete the time setting.

㉔ **Decimal Point/Meter Band Key**
For Frequency Direct Access Tuning, use the key to enter the decimal point of the frequency.
This key also functions as the Meter Band Key.

㉕ Number/Memory Channel/Meter Band Keys
Press the keys in the following ways.
- In Frequency Direct Access Tuning, to enter the frequency number of your desired stations.
- In Memory Tuning, to preset and call the stations.
- In Meter Band Direct Access Tuning, to call the lowest frequency of a SW meter band.

㉖ Band Select Keys

㉗ Speaker (8 cm, 8Ω)

***㉙ External Antenna Jack (EXT ANT)**

*㉙ is not equipped with the model for F.R. Germany.

㉚ Sensitivity Selector (SENS)
Normally set to "DX". When the reception is impaired or interfered by powerful station, set to "LOCAL".
The selector cannot operate for FM reception.

㉛ DC Input Jack (DC IN 6 V ⊖-◑-⊕)

㉜ Earphone Jack (🎧)
Connect the included earphone to the jack.
- Adjust the volume to lower level so as not to injure your ear.

㉝ Carrying Strap

㉞ Radio Battery Compartment (RADIO BATTERY)

㉟ Memory Back-up Battery Compartment (BACK-UP BATTERY)

㊱ MW Frequency Step Selector (In the Memory Back-up Battery Compartment)
Before use, check that the selector is set to the frequency step corresponding to your area.
If not so, set the selector to the correct position.

㊲ World Time Table

㊳ Stand/Short Wave Frequency Allocation

DISASSEMBLY INSTRUCTIONS

Ref. No. 1	Removal of the Telescopic Antenna
Procedure 1	

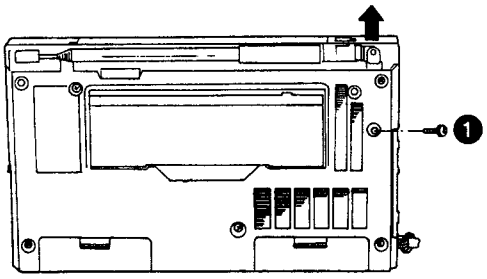

1. Remove the screw ❶.
2. Remove the Telescopic Antenna in the direction of the arrow.

Ref. No. 2	Removal of the Rear Cabinet
Procedure 1→2	

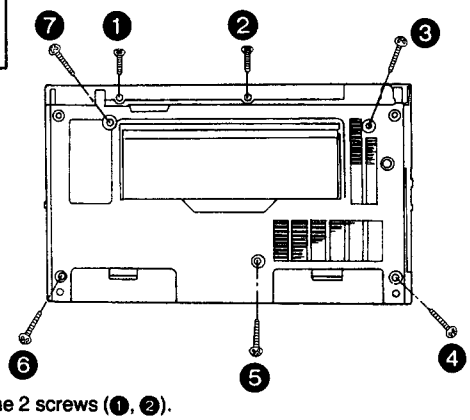

1. Remove the 2 screws (❶, ❷).
2. Remove the 5 screws (❸~❼).

Ref. No. 3	Removal of the Station Reminder
Procedure 1→2→3	

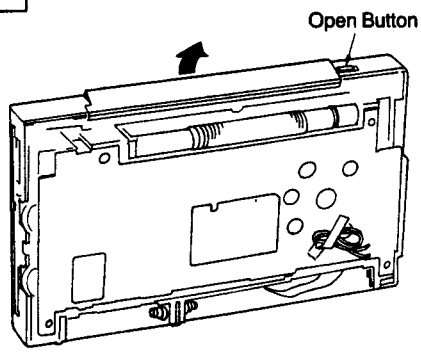

1. Open the Station Reminder.

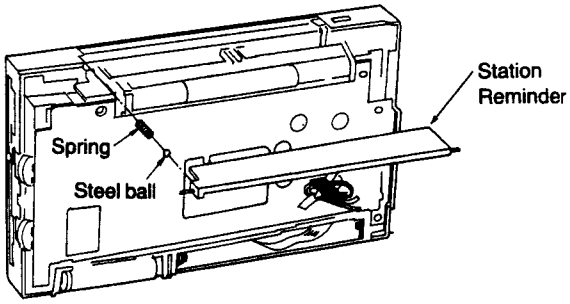

2. Remove the Station Reminder.
   Be careful not to loose the steel ball and the spring.

Ref. No. 4	Removal of the Chassis
Procedure 1→2→3→4	

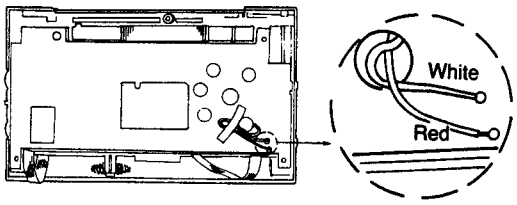

1. Remove the solder from speaker terminal.

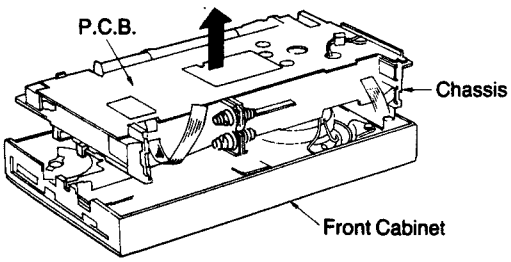

2. Remove the chassis and P.C.B.

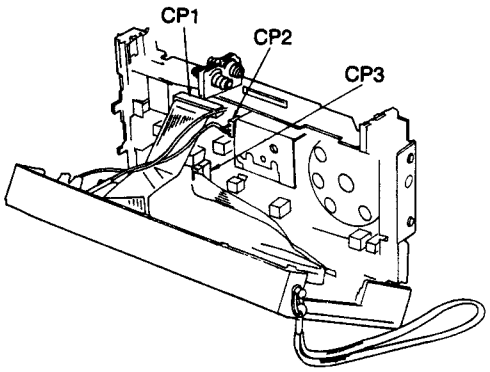

3. Remove the connector (CP1, CP2, CP3).

Ref. No. 7	Removal of the Power Switch P.C.B.
Procedure 1→2→3→4→7	

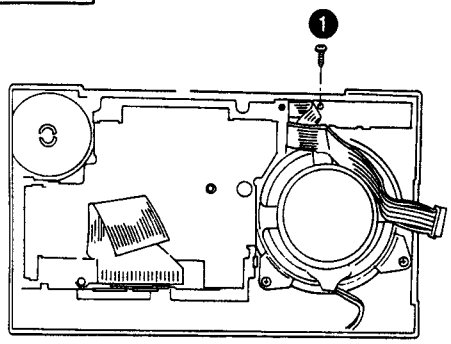

•Remove the screw (1).

Ref. No. 5	Removal of the Main P.C.B.
Procedure 1→2→3→4→5	

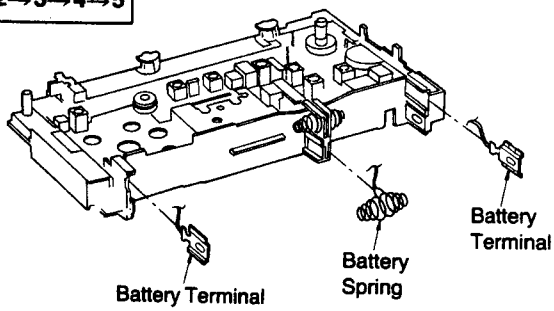

1. Remove the 2 battery terminals and battery spring.

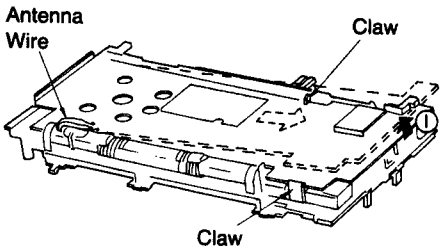

2. Remove the 2 claws and then remove the Main P.C.B. in the direction of the arrow.

Ref. No. 6	Removal of the L.C.D. P.C.B.
Procedure 1→2→3→4→6	

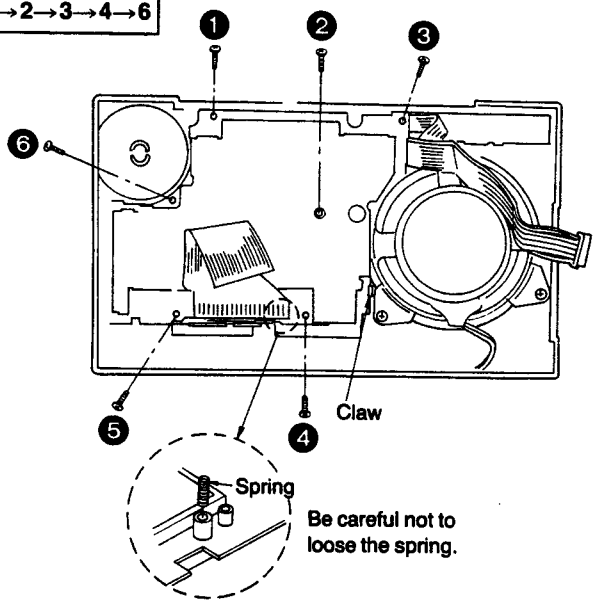

1. Remove the 6 screws (1~6).
2. Remove the claw.

Ref. No. 8	Removal of the Buttons and Knobs
Procedure 1→2→3→4→6→8	

1. Remove the claws in the direction of the arrow ①.
2. Remove the button or knob in the direction of the arrow ②.

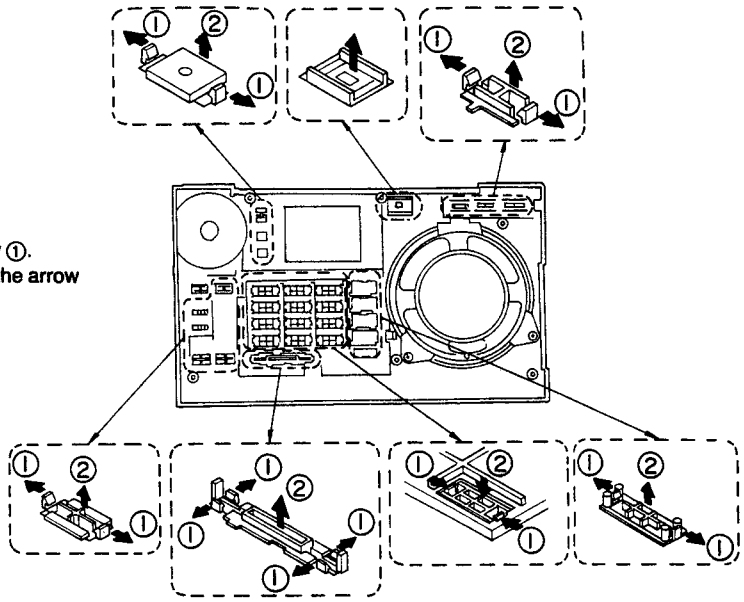

Ref. No. 9	Removal of the Speaker
Procedure 1→2→3→4→9	

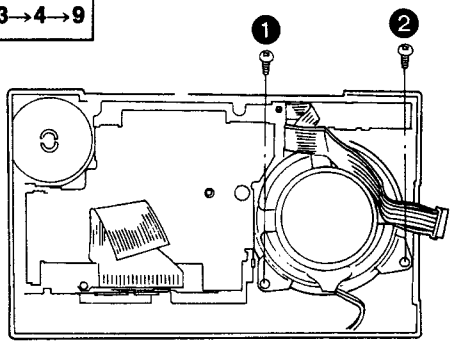

●Remove the 2 screws (❶, ❷).

Ref. No. 10	Removal of the Tuning Knob
Procedure 1→2→3→4→10	

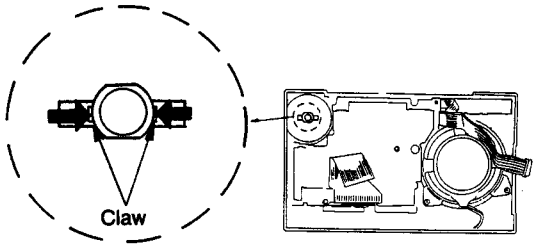

1. Remove the 2 claws in the direction of the arrow.

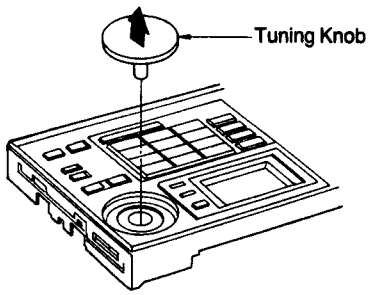

2. Remove the Tuning Knob in the direction of the arrow.

■ L.C.D. P.C.B. Assembly

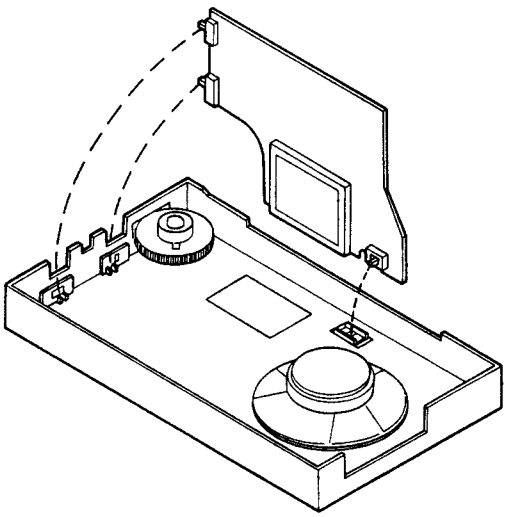

SCHEMATIC DIAGRAM (for LCD Circuit Section and Switch Circuit Section)

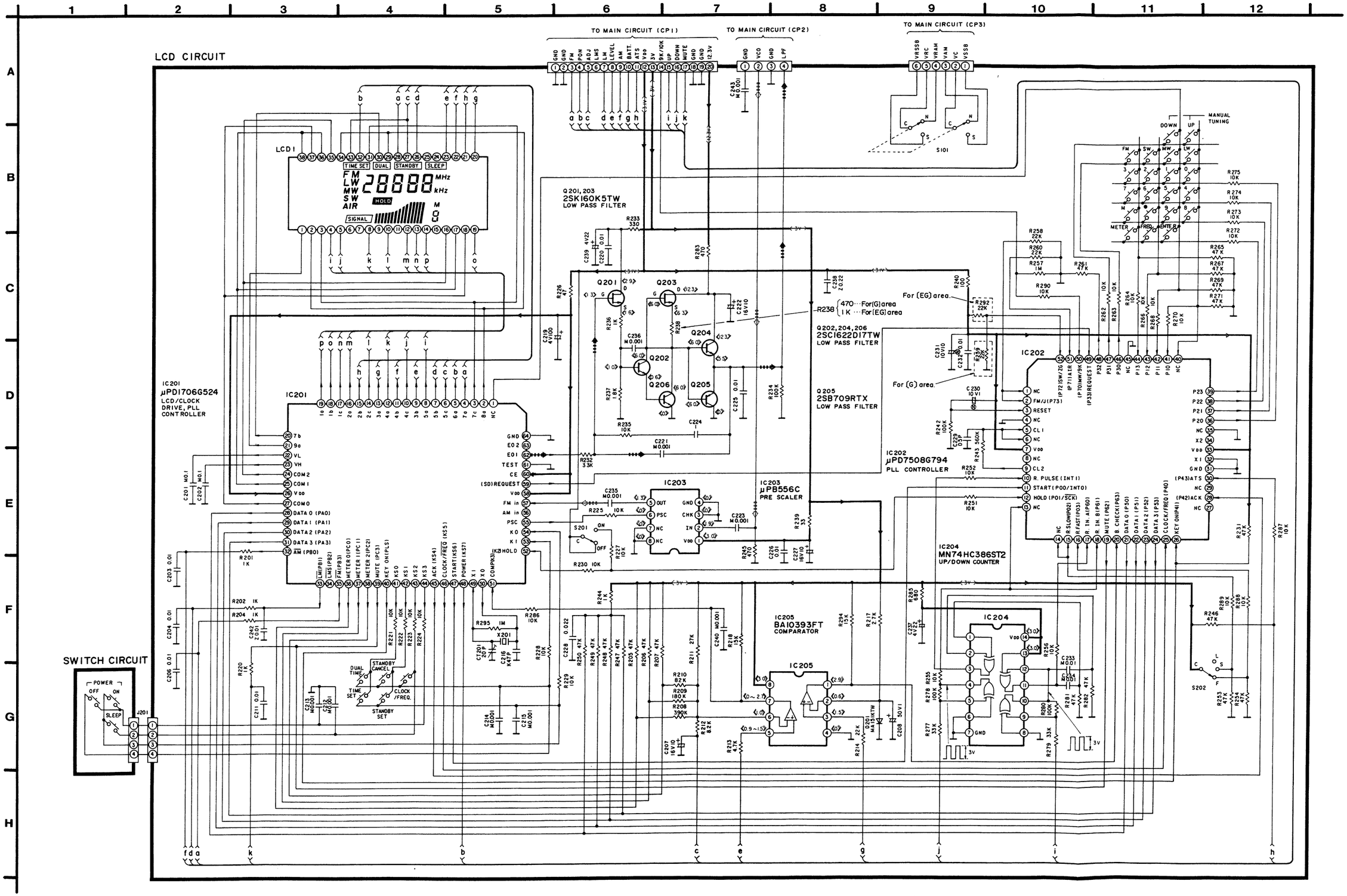

Notes:
1. S10
2. S20
3. S20
4. DC v from
<<
•The su parts li
•This s develo

LIQU

1) The l

ection)

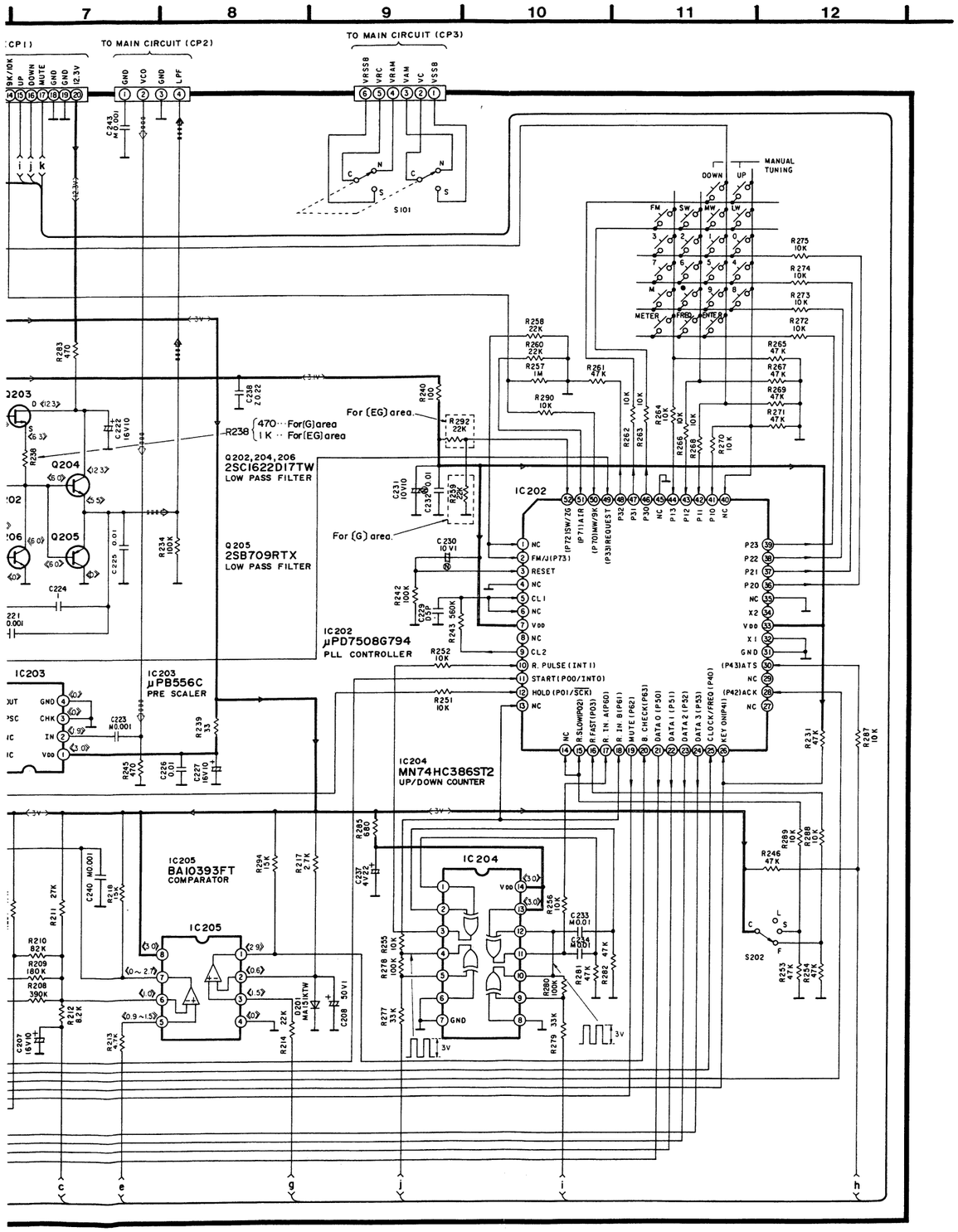

Notes:

1. S101: AM mode select switch in "NORMAL" position. (N...NORMAL, S...SSB)
2. S201: Hold switch.
3. S202: Rotary tuning step select switch in "FAST" position. (L...LOCK, S...SLOW, F...FAST)
4. DC voltage measurement are taken with electronics voltmeter from negative terminal of battery.

<< >> ...SW position

- The supply parts number is described alone in the replacement parts list.
- This schematic diagram may be modified at any time with the development of new technology.

+B Voltage Line
FM, LW, MW, SW VCO In Line
FM, LW, MW, SW Vcap Out Line

IC203 RVIUPB556C

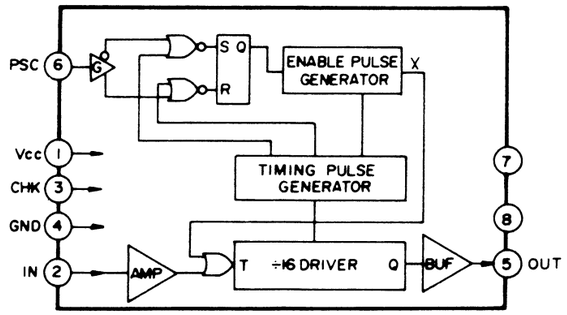

LIQUID CRYSTAL DISPLAY (LCD)

1) The LCD and IC201 are connected in the following way:

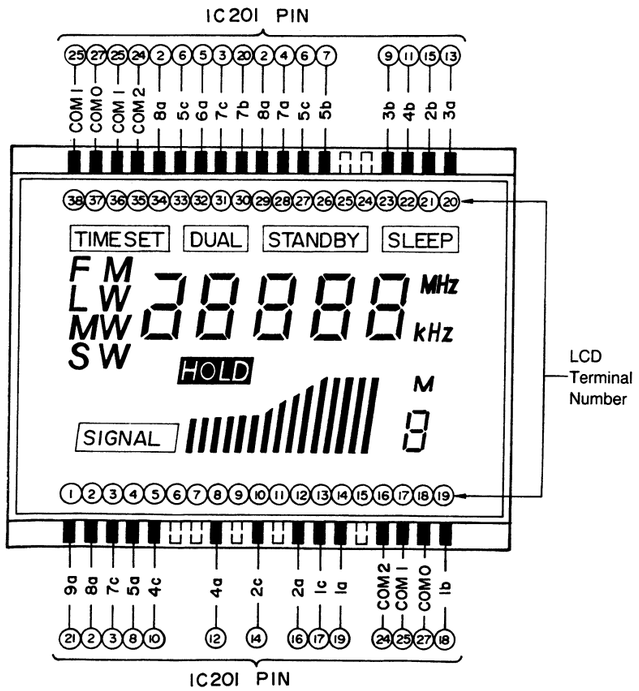

Fig. 1

2) The common and segment terminals of the LCD are connected in the following way:

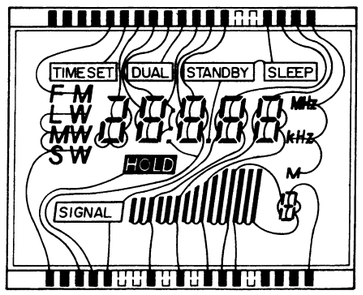

Fig. 2 (Segment)

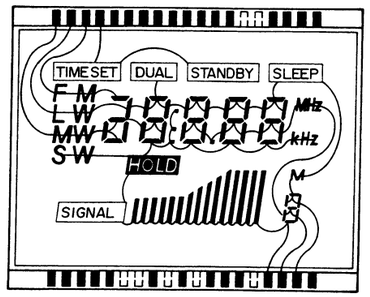

Fig. 3 (Common)

PANA-03551 / DRUCK 2

SCHEMATIC DIAGRAM (for Main Circuit Section)

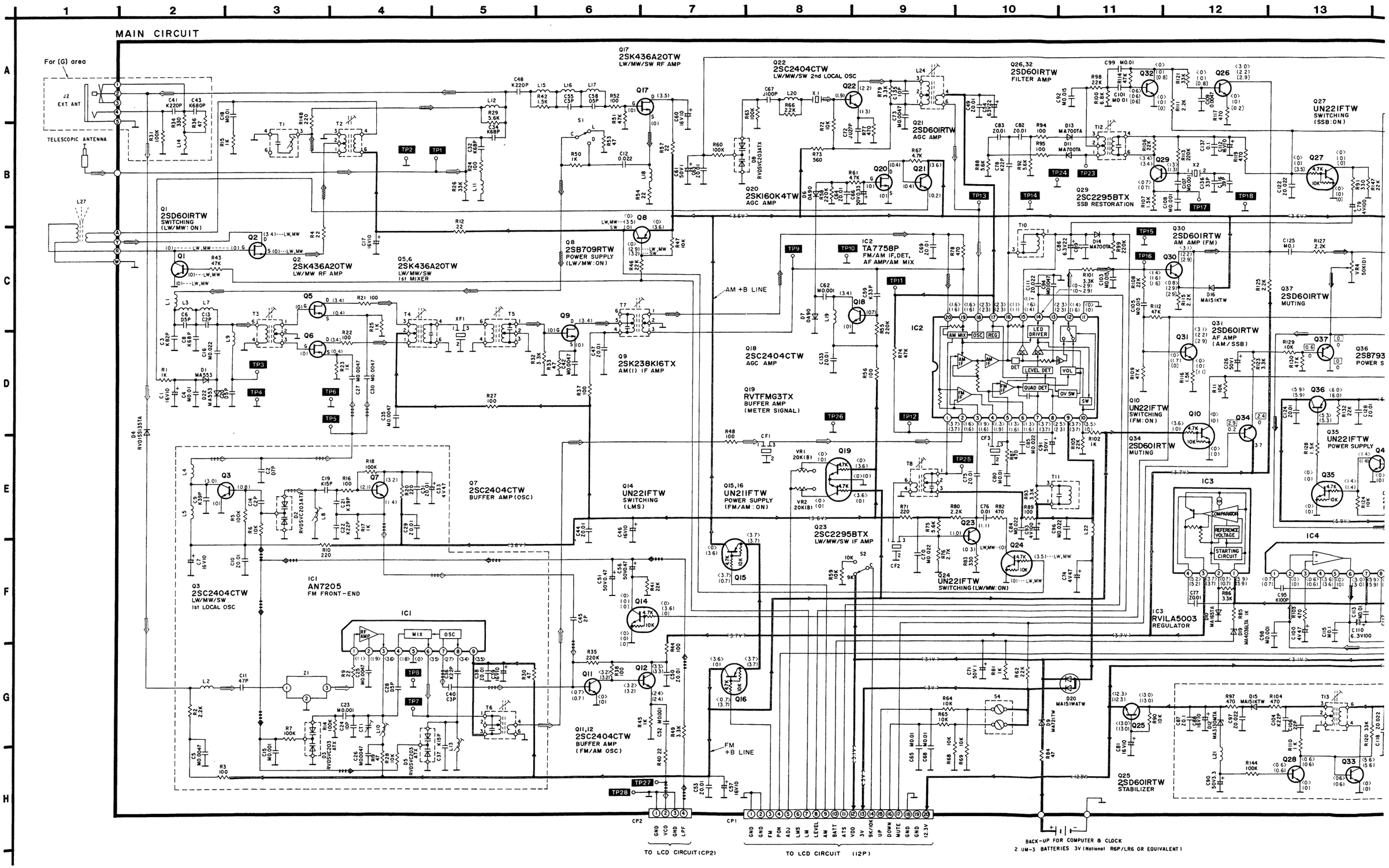

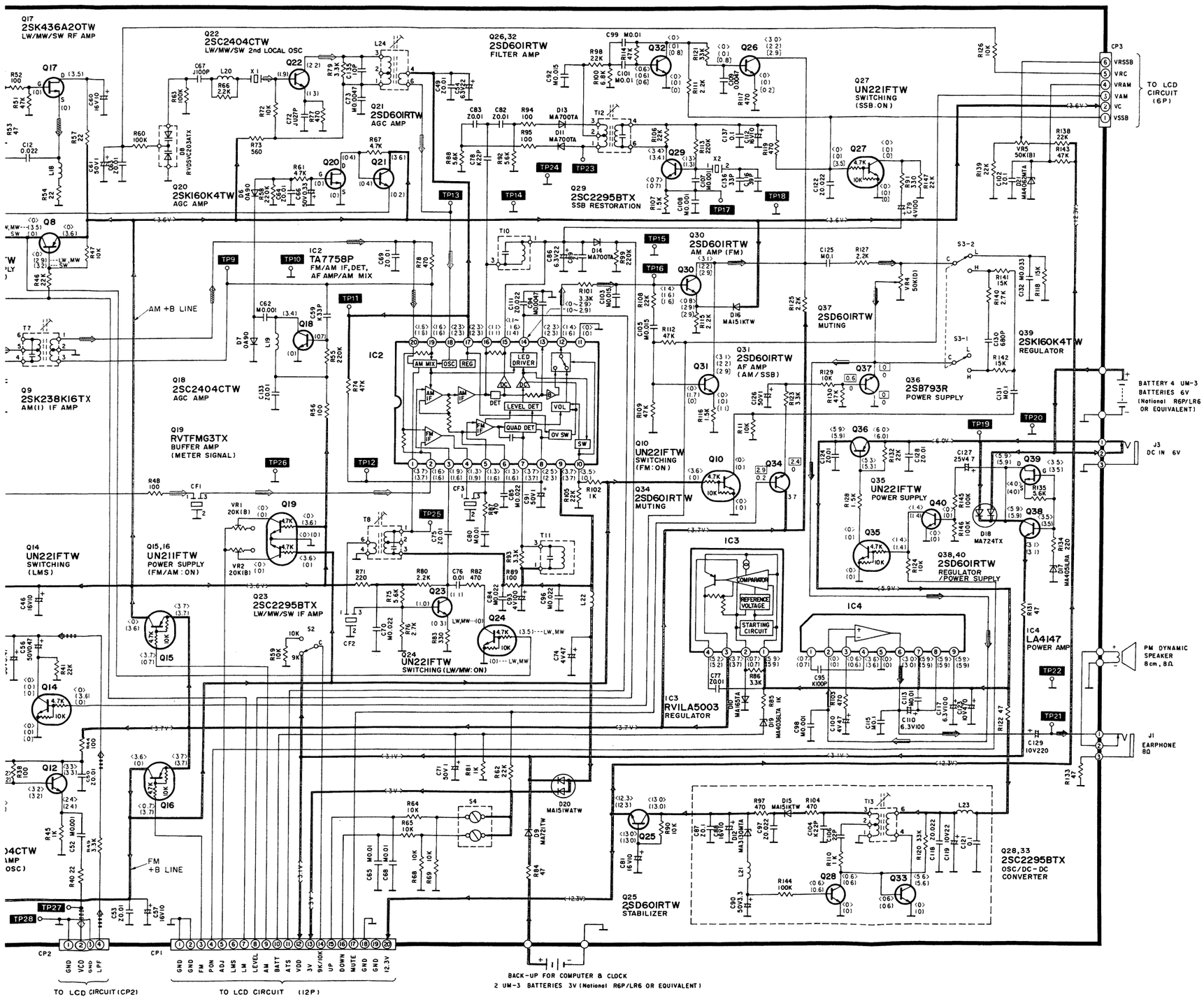

Note:

1. S1: Sensitivity select switch in "DX" position. (L...LOCAL, D...DX)
2. S2: MW frequency step select switch in "9 kHz" position.
3. S3-1, S3-2: Tone select switch in "HIGH" position. (H...HIGH, L...LOW)
4. S4: Rotary tuning switch.
5. VR1: Signal meter (SW) adjustment VR.
6. VR2: Signal meter (FM) adjustment VR.
7. VR4: Volume control VR.
8. VR5: Fine tuning control VR.
9. The mark (▬) shows test point e.g. TP1 =test point 1.
10. DC voltage measurement are taken with electronics voltmeter from negative terminal of battery.
    < >...FM position, ( )...AM position, [ ]...SSB, ▭...MUTING
11. Battery current No signal ..... 52 mA (FM), 62 mA (MW)
    Maximum output ..... 171 mA (FM), 132 mA (MW)

- The supply parts number is described alone in the replacement parts list.
- This schematic diagram may be modified at any time with the development of new technology.

+B Voltage Line
LW, MW, SW Signal Line
Main Signal Line
FM, LW, MW, SW VCO Out Line
LW, MW, SW 2nd OSC Signal Line
FM, LW, MW, SW Vcap in Line
FM Signal Line

CIRCUIT BOARD AND WIRING CONNECTION DIAGRAM

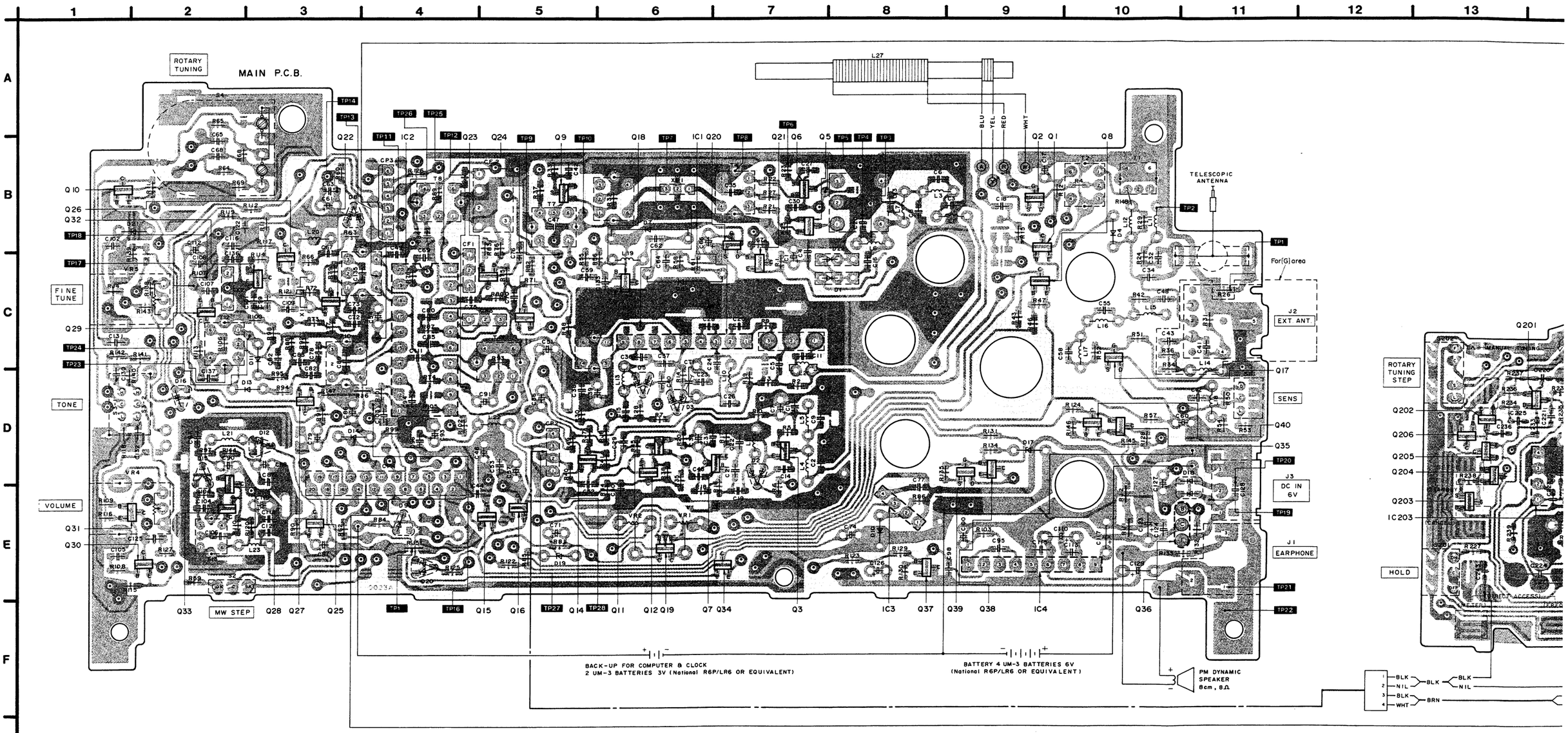

This printed circuit board is shown from the back side of chip parts.

Notes:

1. The circuit shown in ( ) on the conductor indicates printed circuit on the back side of the printed circuit board.
2. The circuit shown in ( ) on the conductor indicates printed circuit on the front side of the printed circuit board.
3. The symbols (●) shown in the circuit board indicate connection points between conductors on the front side and back side of the circuit board.
4. ●—● : Chip Jamper.
5. ●—● : Chip Resistor.

•This circuit board diagram may be modified at any time with the development of new technology.

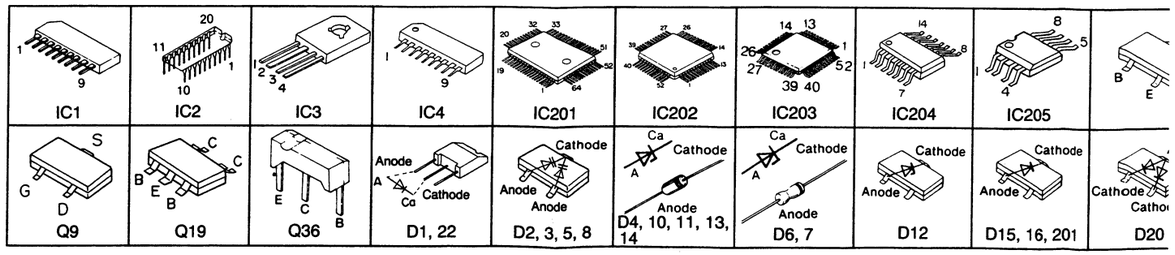

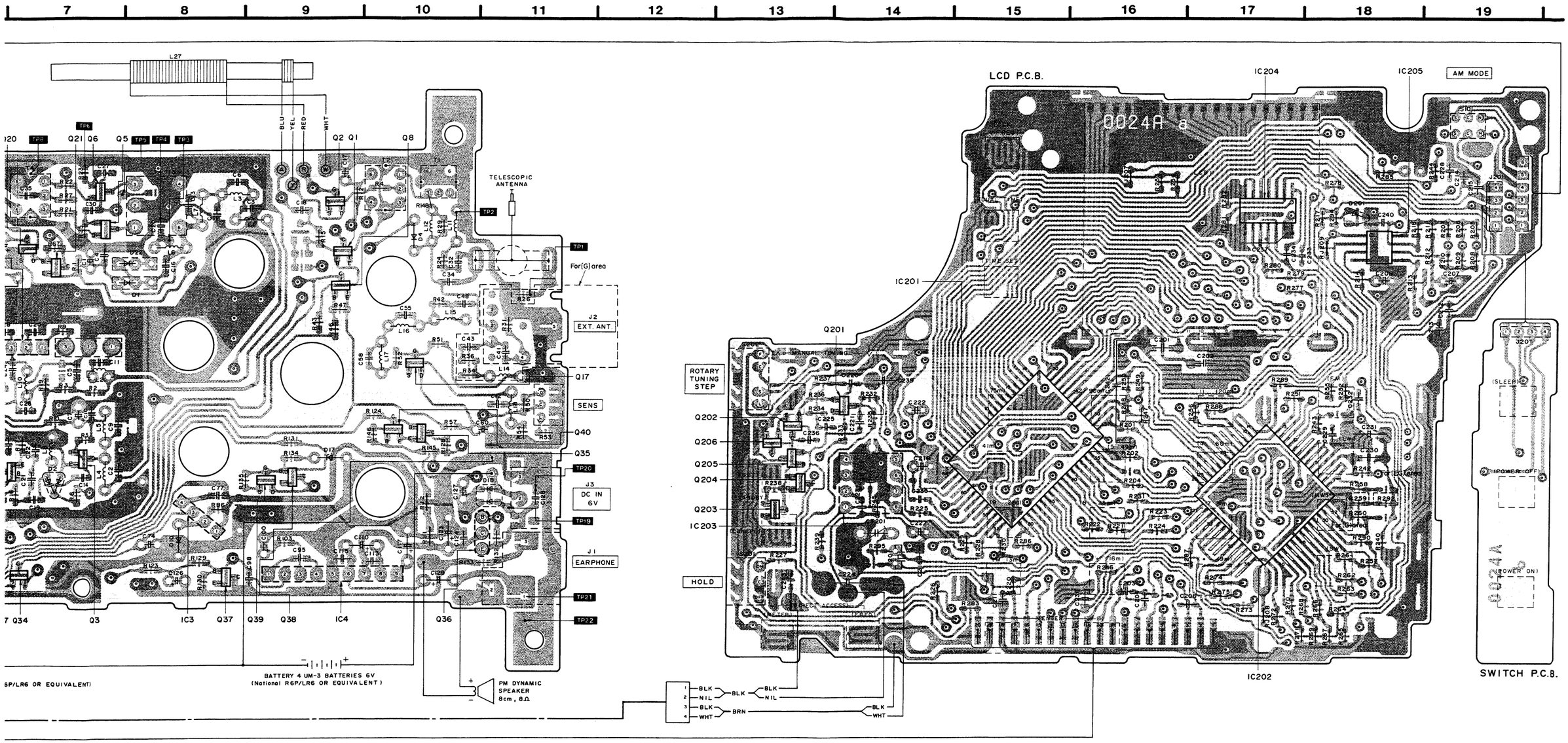

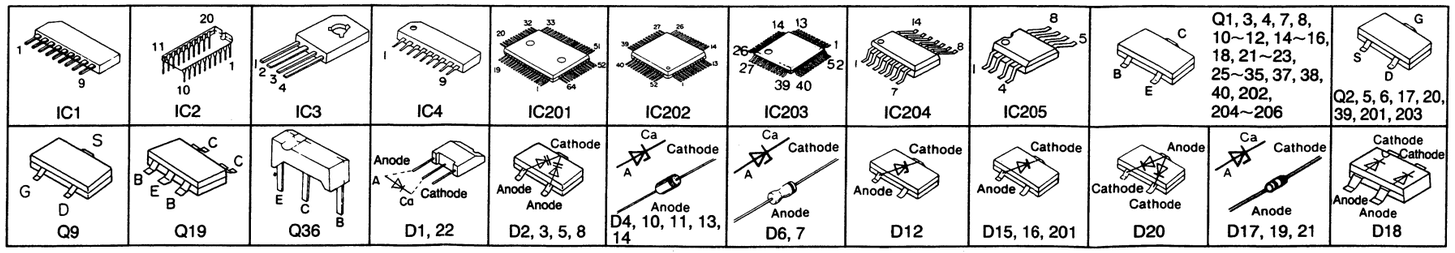

NOTES:

BLK	Black	ORG	Orange
BLU	Blue	PNK	Pink
BRN	Brown	RED	Red
GRY	Gray	SLD	Shield Wire
GRN	Green	VLT	Violet
L.BLU	Light Blue	WHT	White
		YEL	Yellow

MEASUREMENTS AND ADJUSTMENTS

■ ALIGNMENT INSTRUCTIONS

READ CAREFULLY BEFORE ATTEMPTING ALIGNMENT

Note:
1. Set power on switch to ON.
2. Set display select switch to FREQUENCY.
3. Set volume control to MAXIMUM.
4. Set tone select switch to HIGH.
5. Set hold switch to OFF.
6. Set sens switch to DX.
7. Set MW frequency step select switch to 9 kHz.
8. Set band switch to LW, MW, SW or FM.
9. Set SSB switch to OFF or ON.
10. Set power source voltage to 6 V DC.
11. Memorize the following frequency.

FM	CH1...87.5 MHz	LW	CH1...155 kHz
	CH2...90.0 MHz		CH2...450 kHz
	CH3...98.0 MHz		CH3...459 kHz
	CH4...106.0 MHz	MW	CH1...605 kHz
	CH5...108.0 MHz	SW	CH1...10,000 MHz
	CH6...94.0 MHz		CH2...15,000 MHz
			CH3...29,999 MHz

EQUIPMENT REQUIRED

1. Frequency counter.
2. Oscilloscope (Dual dimension).
3. RF voltmeter.
4. DC digital voltmeter.
5. Ampere meter.
6. Signal generator.

■ FM VCO, SW VCO, SW 2nd LOCAL OSC ALIGNMENT

	BAND	FREQUENCY DISPLAY SETTING	DC DIGITAL VOLTMETER	FREQUENCY COUNTER	ADJUSTMENT (Refer to Fig. 1)	REMARKS
			FM VCO ALIGNMENT			
(1)	FM	108.00 MHz (CH5)	TP27...(+) TP28...(−)	——	L13	Adjust L13 for 9.00 ±0.1 V reading on DC digital voltmeter.
			SW VCO ALIGNMENT			
(2)	SW	29,999 MHz (CH3)	〃	——	L8	Adjust L8 for 10.00 ±0.1 V reading on DC digital voltmeter.
			SW 2nd LOCAL OSC ALIGNMENT			
(3)	SW	10,000 MHz (CH1)	——	TP13...(+) TP14...(−)	L24	Adjust L24 for 55,395 MHz (EG...55,386 MHz) ±100 Hz reading on frequency counter.

■ SSB ALIGNMENT

	BAND	FREQUENCY DISPLAY SETTING	INDICATOR (ELECTRONICS VOLTMETER or OSCILLOSCOPE)	ADJUSTMENT (Refer to Fig. 1)	REMARKS
(4)	SW	——	TP23...(+) TP24...(−)	T12	Adjust for maximum output.

■ FM IF, RF, AUTO STOP ZERO VOLTAGE ALIGNMENT

	BAND	SIGNAL GENERATOR or SWEEP GENERATOR		FREQUENCY DISPLAY SETTING	INDICATOR (ELECTRONICS VOLTMETER or OSCILLOSCOPE)	ADJUSTMENT (Refer to Fig. 1)	REMARKS
		CONNECTIONS	FREQUENCY				
			FM-IF ALIGNMENT				
(5)	FM	Connect to test point TP7 through 0.001 µF. Negative side to test point TP8	10.7 MHz (400 Hz SWP.)	Point of non-interference. (on/ about 90 MHz)	Connect vert. amp. of scope to test point TP16. Negative side to test point TP15.	T6 (FM 1st IFT)	Adjust of maximum amplitude. (Refer to fig. 2.)
(6)	FM	〃	〃	〃	〃	T11 (FM 2nd IFT)	Adjust for maximum amplitude. (Refer to fig. 3.)

	BAND	SIGNAL GENERATOR or SWEEP GENERATOR		FREQUENCY DISPLAY SETTING	INDICATOR (ELECTRONICS VOLTMETER or SCOPE)	ADJUSTMENT (Refer to Fig. 1)	REMARKS
		CONNECTIONS	FREQUENCY				
				FM-RF ALIGNMENT			
(7)	FM	Connect to test point TP1 through FM dummy antenna. Negative side to test point TP2.	90.00 MHz	90.00 MHz (CH2)	Connect vert. amp. of scope to test point TP21. Negative side to test point TP22.	L10	Adjust for maximum output.
(8)	FM	"	106.00 MHz	106.00 MHz (CH4)	"	CT1	Adjust for maximum output. Repeat steps (6), (7).
				FM-AUTO STOP ZERO VOLTAGE ALIGNMENT			
(9)	FM	Connect to test point TP1 through FM dummy antenna. Negative side to test point TP2.	98.00 MHz (40 dB DEMOD.)	98.00 MHz (CH3)	Connect vert. amp. of scope to test point TP11. Negative side to test point TP12.	T11	Adjust T9 for 0 ±0.05 V electronics voltmeter reading.

■ SW IF, LW IF TRAP ALIGNMENT

	BAND	SIGNAL GENERATOR or SWEEP GENERATOR		FREQUENCY DISPLAY SETTING	INDICATOR (ELECTRONICS VOLTMETER or OSCILLOSCOPE)	ADJUSTMENT (Refer to Fig. 1)	REMARKS
		CONNECTIONS	FREQUENCY				
				SW-IF (1st) ALIGNMENT			
(10)	SW	TP3 ...(+) TP4 ...(−)	55,843 MHz 95 dB, 4% Mod. with 1 kHz (Frequ. Mod.)	10,000 MHz (CH1)	Connect vert. amp. of scope to test point TP9. Negative side to test point TP10.	T4 T5 T7	Adjust for flat and maximum output. (Refer to Fig. 4)
(11)	SW	"	10,000 MHz 30% Mod. with 400 Hz (Ampli. Mod.)	10,000 MHz (CH1)	Output meter across Voice coil.	T7	Adjust for maximum output.
				SW-IF (2nd) ALIGNMENT			
(12)	SW	TP25...(+) TP26...(−)	450 kHz...(G) 459 kHz...(EG) 30% Mod. with 400 Hz.	Point of noninterference. (on/about 600 kHz).	Connect vert. amp. of scope to test point TP16. Negative side to test point TP15.	T8 T10	Adjust for maximum output.
				LW-IF TRAP ALIGNMENT			
(13)	LW	Fashion loof of several turns of wire and radiate signal into loop of receiver.	450 kHz...(G) 459 kHz...(EG) 40 dB, 30% Mod. with 400 Hz	450 kHz...(G) 459 kHz...(EG) (CH2)	Output meter across Voice coil.	T1 (Trap Coil)	Adjust for maximum output.

■ SIGNAL METER ALIGNMENT

	BAND	SIGNAL GENERATOR or SWEEP GENERATOR		FREQUENCY DISPLAY SETTING	ADJUSTMENT (Refer to Fig. 1)	REMARKS
		CONNECTIONS	FREQUENCY			
(14)	FM	Fashion loof of several turns of wire and radiate signal into loop of receiver.	94.00 MHz (30 dB)	94.00 MHz (CH6)	VR2	•Adjust VR2 50 that the all signal indicator appears. (Refer to Fig. 6)
(15)	SW	"	15,000 MHz (45 dB)	15,000 MHz (CH2)	VR1	•Adjust VR1 so that the all signal indicator appears. (Refer to Fig. 6)

■ CLOCK ALIGNMENT

	BAND	FREQUENCY DISPLAY SETTING	FREQUENCY COUNTER	ADJUSTMENT (Refer to Fig. 5)	REMARKS
(16)	SW	29,999 MHz...(G) 26,100 MHz...(EG)	TP5...(+) TP6...(−)	CT201	Adjust the frequencies according to room temperature.

Room Temperature	Area	Frequency
8°C≦t<22°C	(EG)	81,945000 MHz±300 Hz
	(G)	85,844000 MHz±300 Hz
22°C≦t<26°C	(EG)	81,944800 MHz±300 Hz
	(G)	85,843800 MHz±300 Hz
26°C≦t<30°C	(EG)	81,944500 MHz±300 Hz
	(G)	85,843500 MHz±300 Hz
30°C≦t<33°C	(EG)	81,944100 MHz±300 Hz
	(G)	85,843100 MHz±300 Hz

■ ALIGNMENT POINT

●Please refer to Circuit Board and Wiring Connection Diagram for test point locations.

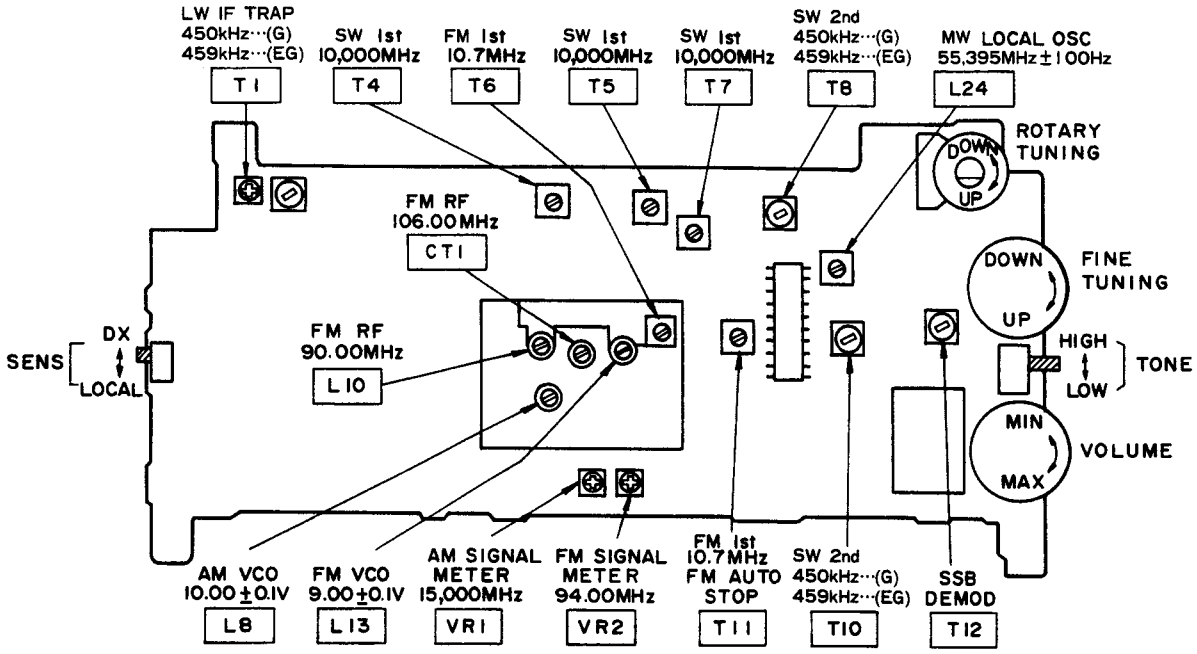

Fig. 1

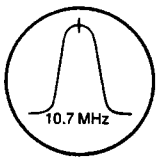

Fig. 2

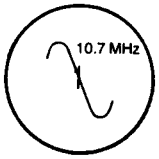

Fig. 3

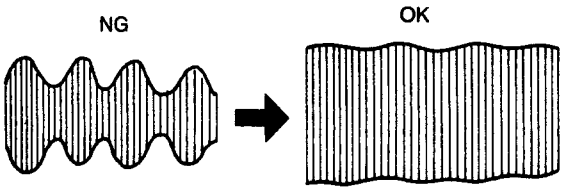

Fig. 4

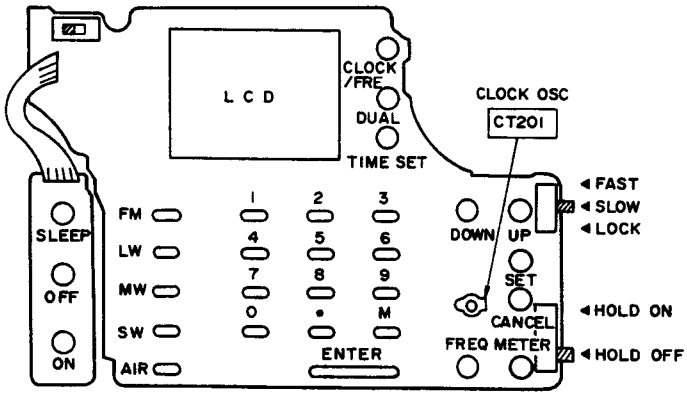

Fig. 5

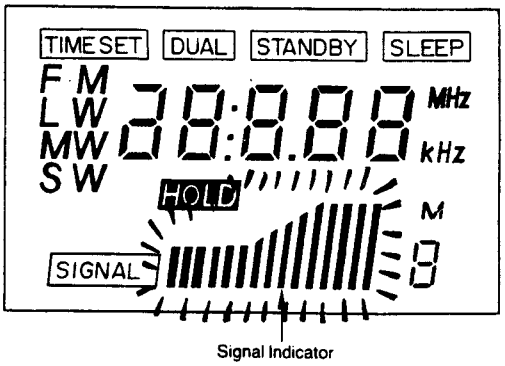

Fig. 6

IC TERMINAL FUNCTION

■ IC201 (UPD1706G524)

1) Terminal view

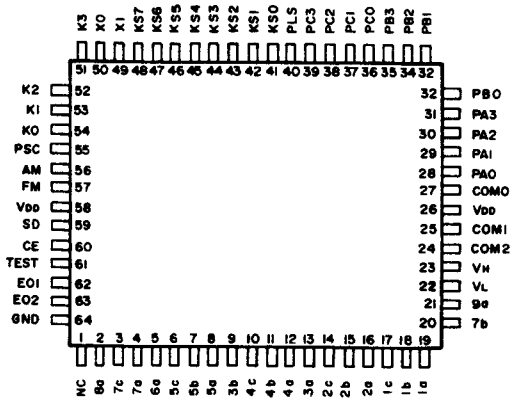

Fig. 1

2) Block diagram

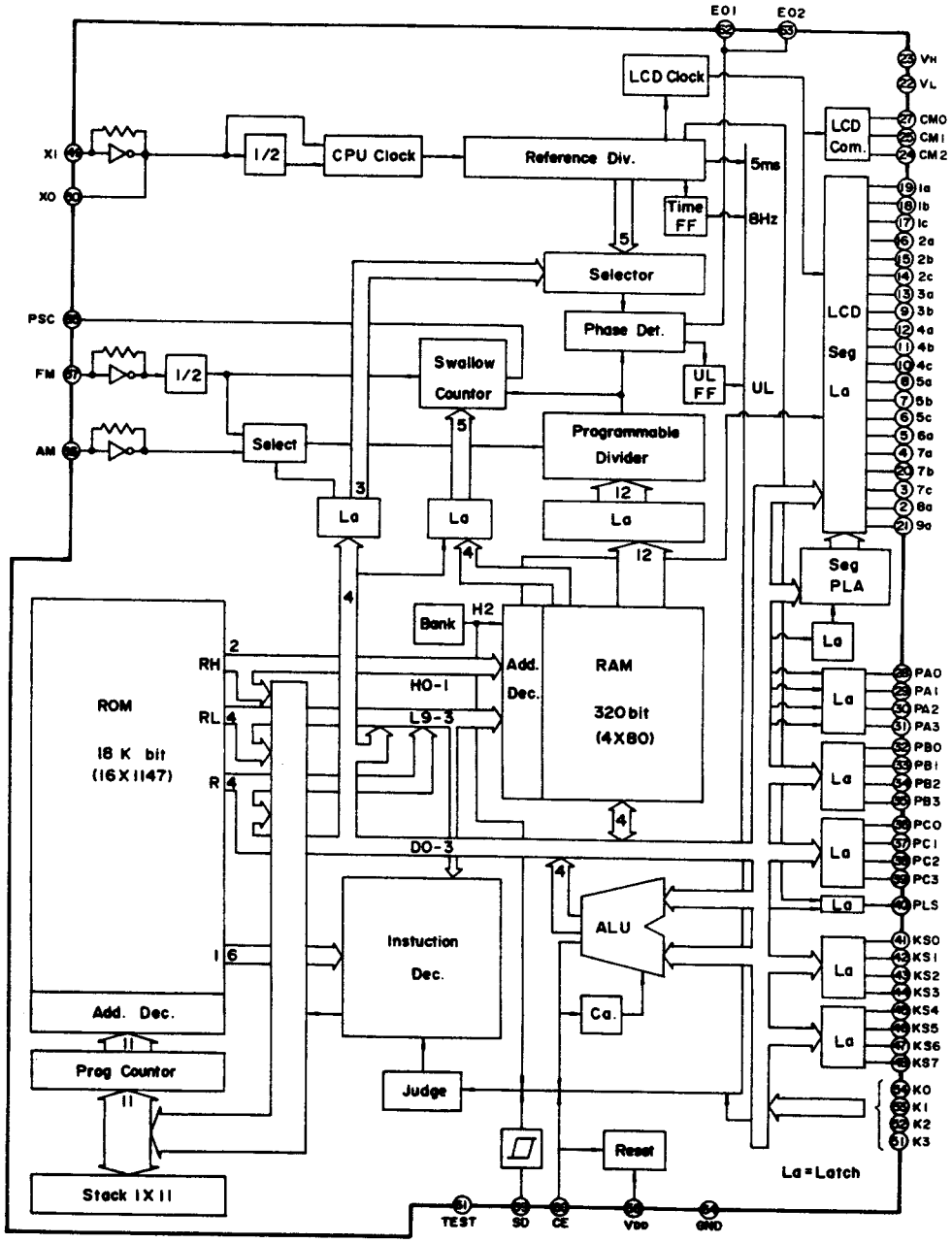

Fig. 2

3) Explanation of each terminal

Pin. No.	Symbol	Description
2~21	1a~9a, 1b~5b, 7b 1c, 2c, 4c, 5c, 7c	Output terminals for LCD segment signals. (⅓ duty and ⅓ bias LCD drive.) Refer to Fig. 3 for output waveforms.
22 23	V_L V_H	Intermediate voltage output terminals for LCD. In this model, a 0.1 μF capacitor is connected to stabilize the intermediate voltage.
24 25 27	COM2 COM1 COMØ	Terminals for LCD common signal output. 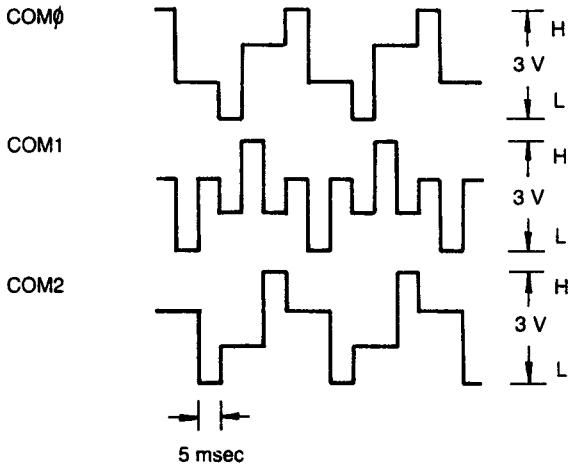
26, 58	V_{DD}	A voltage of 3 V±10% supply to this terminal during device.
28~31	PA0~PA3	Data signal output terminal.
32 33 34 35	PBØ PB1 PB2 PB3	Band select output terminals. Outputs a low signal during LW, MW and SW. Outputs a low signal during LW and MW. Outputs a low signal during LW, MW and SW. Outputs a low signal during FM.
36 37 38	PCØ PC1 PC2	Level meter comparator output terminals.
39	PC3	Muting output terminal. The noise generated from the speaker when the power is turned on and off is muted.
40	PLS	Key on terminal. Outputs a low when a key on the IC201 side is pressed.
41~44	KSØ~KS3	Key return signal source output terminals for momentary switch on the key matrix. 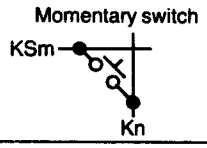
45 59	KS4 SD	Accept signal output terminal for data to IC202. High during operation. Transfer request signal output terminal or data to IC202. High during operation. 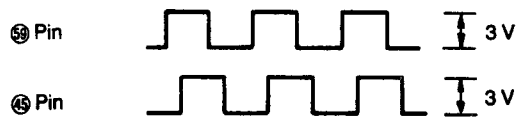

Pin. No.	Symbol	Description
46	KS5	Status control output terminal for IC202. High during time setting.
47	KS6	Automatic control output terminal for IC202. High when power is on and during times setting.
48	KS7	Radio power on/off output terminal. High when radio is on.
49 50	X1 Xϕ	Terminals used for connecting a quartz oscillator. Connects a 150 kHz quartz oscillator.
51	K3	Level meter comparator input terminal.
52	K2	Hold signal input terminal.
53 54	K1 Kϕ	Terminals for key matrix key return signal input.
55	PSC	Select signal output terminal for prescaler divider ratio. This terminal generates pulses at the leading edge of the signal applied to the FM terminal (pin 57) and continues to do so until the contents of the internal swallow counter are 0. At this time, the divider ratio of the prescaler is 1/17. When the contents of the swallow counter become 0, this terminal goes low and the divider ratio of the prescaler becomes 1/16.
57	FM	Input terminal for the FM local oscillator (VCO) output divided by 1/16 or 1/17 by the prescaler.
60	CE	Device select signal input terminal. Set the terminal high to select a device and low to deselect a device.
61	TEST	Terminal to test the device. Normally connected to "GND".
62	E02	PLL error output terminal. The output signal is output to the LPF (Q201–Q206). If the divided oscillation frequency is higher than the standard frequency, a high signal is output. If lower, a low signal is output. If the same, the terminal floats.
64	GND	Ground terminal.

4) Output signal waveforms of LCD segment
These output signal waveforms are produced when the frequency is SW 15,000 MHz, waveforms of the segments vary with frequency.

Pin No.	Output signal waveforms	Pin No.	Output signal waveforms
2, 9, 18	H 1V L	6, 13	H 3V L
3, 27	H 3V L	8, 10, 12, 14, 16, 19, 20	H 3V L
4, 25	H 3V L	17, 21	H 3V L
5, 7, 11, 15	H 3V L	24	H 3V L 15m SeC

Fig. 3

■ IC202 (UPD7508G794)

1) Terminal view
μPD7508G732 (IC202)

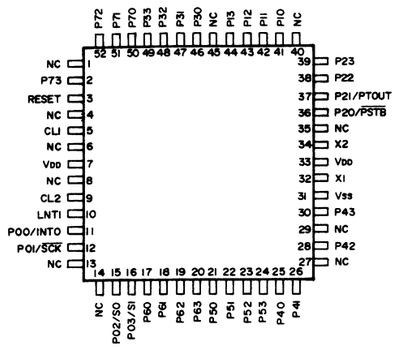

Fig. 4

2) Block diagram

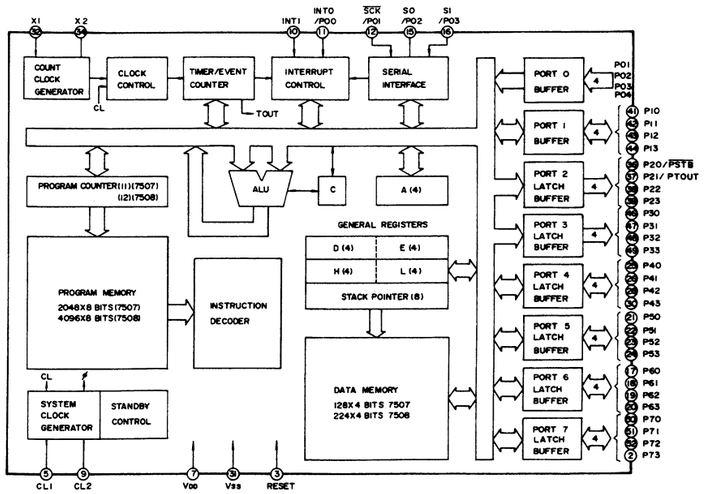

Fig. 5

3) Explanation of each terminal

Pin No.	Symbol	Description
2	P73	FM receiving frequency select terminal. Low=87.5–108.0 MHz (for main unit) High=76.0–108.0 MHz
3	REST	Reset signal input terminal.
5	CLI	Clock signal input terminal.
7, 33	V_{DD}	A voltage of 3 V±10% supply to this terminal during device.
9	CL2	Clock signal output terminal.
10 17 18	INT1 P60 P61	Trigger pulse input terminal for rotary tuning. Data input terminal for rotary tuning. Data input terminal for rotary tuning. During the down mode (leading edge of the rotary pulse, ROTARY INPUT A=ROTARY INPUT B): ⑩ Pin (ROTARY PULSE) 3 V ⑰ Pin (ROTARY IN. A) 3 V ⑱ Pin (ROTARY IN. B) 3 V max. 85 μs During the up mode (leading edge of the rotary pulse, ROTARY INPUT A=ROTARY INPUT B): ⑩ Pin (ROTARY PULSE) 3 V ⑰ Pin (ROTARY IN. A) 3 V ⑱ Pin (ROTARY IN. B) 3 V

Pin No.	Symbol	Description
11	POϕ/INTO	Start signal input terminal.
12	PO1/$\overline{SCK}$	Hold input terminal. A high signal sets the key lock mode.
15	PO2/Sϕ	Rotary tuning speed select input terminal. High for slow and low for lock.
16	PO3/S1	Rotary tuning speed select input terminal. High for fast and low for lock.
19	P62	Tuning output terminal. During rotary tuning or manual tuning (up or down), a high signal is output from this terminal.
20	P63	Battery 4 V check input terminal. Monitors in intervals of 100 μs. If low for 3 consecutive times, a flashing "E" is displayed and 7 seconds later the power is switched off.
21~24	P50~P53	Data signal output terminal.
25	P4ϕ	CLOCK/FREQ display input terminal. High for "CLOCK" display and low for "FREQ" display.
26	P41	Key on terminal. Low when a key on the IC201 side is pressed.
28 49	P42 P33	Accept signal input terminal for data from IC201. High during operation. Transfer request signal input terminal for data from IC201. High during operation. ㊾ Pin 3 V ㉘ Pin 3 V
30	P43	ATS (Auto scan stop) input terminal. If a low signal is input during auto scan for 118 msec or longer, the scan stops.
31	GND	Ground terminal.
32	X1	Ground terminal.
36~39 46 47	$\overline{PSTB}$/P20~P23 P30 P31	Key return signal source output terminals for the momentary switches in the key matrix. Momentary switch KSm Kn
41~44	P10~P13	Terminals for key matrix key return signal input.
50	P70	MW 9/10 kHz select terminal. High for 9 kHz and low for 10 kHz.
51	P71	Air band country select terminal. High for Japan and low for other countries.
52	P72	SW band country select terminal. High for Germany and low for other countries.

PANA-03551 / DRUCK 7

BLOCK DIAGRAM

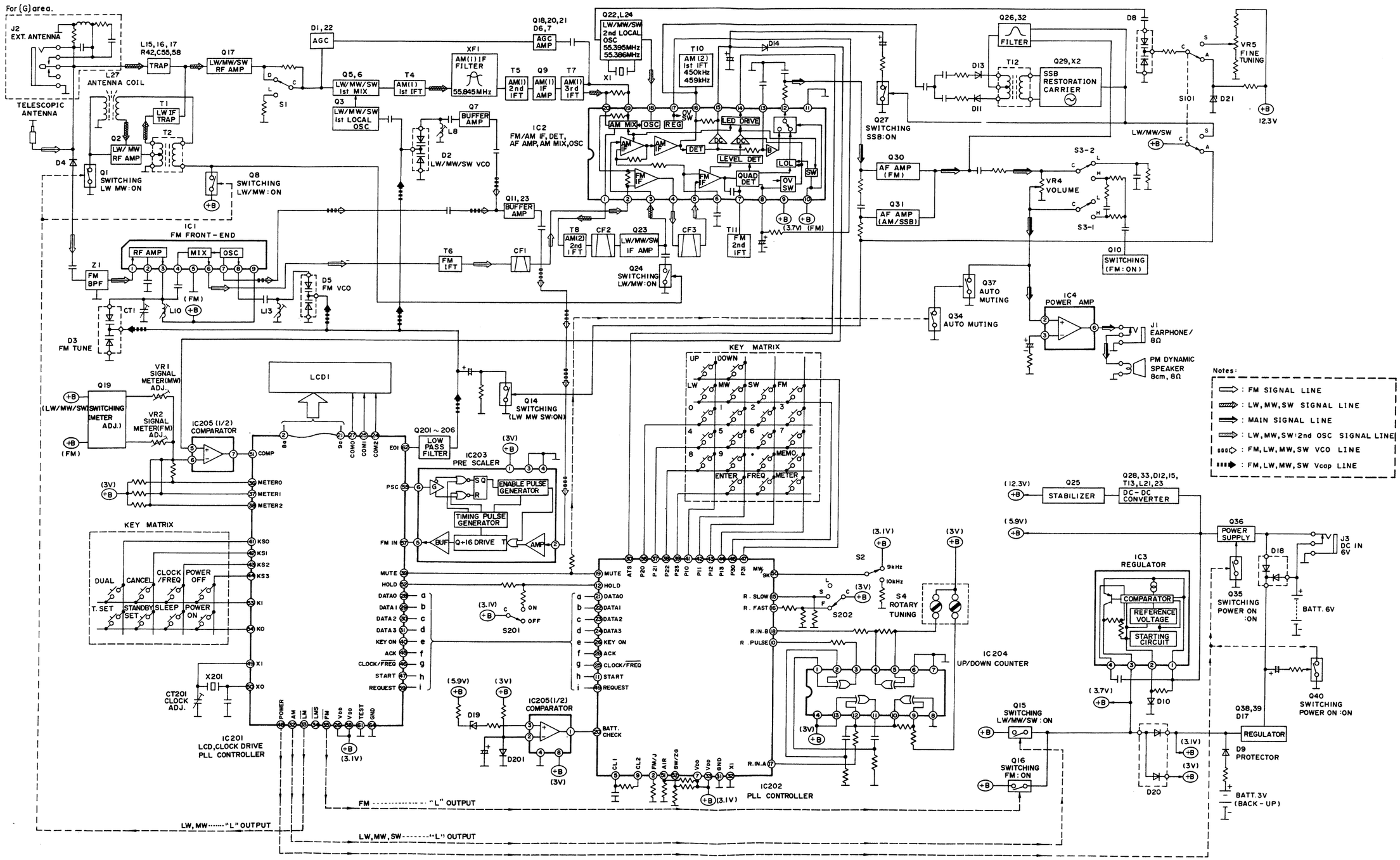

PANA-03551 / DRUCK 8

Notes : * Important safety notice:
Components identified by ⚠ mark have special characteristics important for safety. When replacing any of these components use only manufacturer's specified parts.
* Bracketed indications in Ref. No. columns specify the area. (Refer to the first page for area.)
Parts without these indications can be used for all areas.

Ref. No.	Part No.	Part Name & Description	Remarks
		INTEGRATED CIRCUITS	
IC1	AN7205	IC, FRONT END	
IC2	TA7758P	IC, FM/AM IF, DET, etc	
IC3	RVILA5003	IC, REGULATOR	
IC4	LA4147	IC, POWER AMP	
IC201	UPD1706G524	IC, LCD/CLOCK DRIVE, PLL	
IC202	UPD7508G794	IC, PLL COUNTER	
IC203	RVIUPB556C	IC, PRE SCALER	
IC204	MN74HC386ST2	IC, UP/DOWN COUNTER	
IC205	BA10393FT	IC, COMPARATOR	
		TRANSISTORS	
Q1	2SD601RTW	TRANSISTOR	
Q2	2SK436A20TW	TRANSISTOR	
Q3	2SC2404CTW	TRANSISTOR	
Q5	2SK436A20TW	TRANSISTOR	
Q6	2SK436A20TW	TRANSISTOR	
Q7	2SC2404CTW	TRANSISTOR	
Q8	2SB709RTW	TRANSISTOR	
Q9	2SK238K16TX	TRANSISTOR	
Q10	UN221FTW	TRANSISTOR	
Q11	2SC2404CTW	TRANSISTOR	
Q12	2SC2404CTW	TRANSISTOR	
Q14	UN221FTW	TRANSISTOR	
Q15	UN211FTW	TRANSISTOR	
Q16	UN211FTW	TRANSISTOR	
Q17	2SK436A20TW	TRANSISTOR	
Q18	2SC2404CTW	TRANSISTOR	
Q19	RVTFMG3TX	TRANSISTOR	
Q20	2SK160K4TW	TRANSISTOR	
Q21	2SD601RTW	TRANSISTOR	
Q22	2SC2404CTW	TRANSISTOR	
Q23	2SC2295BTX	TRANSISTOR	
Q24	UN221FTW	TRANSISTOR	
Q25	2SD601RTW	TRANSISTOR	
Q26	2SD601RTW	TRANSISTOR	
Q27	UN221FTW	TRANSISTOR	
Q28	2SC2295BTX	TRANSISTOR	
Q29	2SC2295BTX	TRANSISTOR	
Q30	2SD601RTW	TRANSISTOR	
Q31	2SD601RTW	TRANSISTOR	
Q32	2SD601RTW	TRANSISTOR	
Q33	2SC2295BTX	TRANSISTOR	
Q34	2SD601RTW	TRANSISTOR	
Q35	UN221FTW	TRANSISTOR	
Q36	2SB793R	TRANSISTOR	
Q37	2SD601RTW	TRANSISTOR	
Q38	2SD601RTW	TRANSISTOR	
Q39	2SK160K4TW	TRANSISTOR	
Q40	2SD601RTW	TRANSISTOR	
Q201	2SK160K5TW	TRANSISTOR	
Q202	2SC1622D17TW	TRANSISTOR	
Q203	2SK160K5TW	TRANSISTOR	
Q204	2SC1622D17TW	TRANSISTOR	
Q205	2SB709RTX	TRANSISTOR	
Q206	2SC1622D17TW	TRANSISTOR	
		DIODES	
D1	MA553	DIODE	
D2	RVDSVC203ATX	DIODE	
D3	RVDSVC203ATX	DIODE	
D4	RVD1SS135TA	DIODE	
D5	RVDSVC203ATX	DIODE	
D6	0A90	DIODE	
D7	0A90	DIODE	
D8	RVDSVC203ATX	DIODE	
D9	MA721TW	DIODE	
D10	MA165TA	DIODE	
D11	MA700TA	DIODE	
D12	MA3130MTW	DIODE	
D13	MA700TA	DIODE	
D14	MA700TA	DIODE	
D15	MA151KTW	DIODE	
D16	MA151KTW	DIODE	
D17	MA4051LRA	DIODE	
D18	MA724TX	DIODE	
D19	MA4036LTA	DIODE	
D20	MA151WATW	DIODE	
D21	MA4062MTA	DIODE	
D22	MA553	DIODE	
D201	MA151KTW	DIODE	
		VARIABLE RESISTORS	
VR1	EVND4AA00B24	V. RESISTOR, SIGNAL METER	
VR2	EVND4AA00B24	V. RESISTOR, SIGNAL METER	
VR4	EVUJ05T02D54	V. RESISTOR, VOLUME	
VR5	EVUJ05T02B54	V. RESISTOR, BATT ERROR ADJ.	
		COMPONENT COMBINATIONS	

Ref. No.	Part No.	Part Name & Description	Remarks
Z1	RXABPMB8L	COMPONENT COMBINATION	#Z
		COILS	
L1	RLQZPR47MT-Y	COIL	
L2	RLQY25S5-0	COIL	
L3	RLQZP1R0MT-Y	COIL	
L4	RLQZPR22MT-Y	COIL	
L5	RLQZPR56MT-Y	COIL	
L7	RLQZP1R5MT-Y	COIL	
L8	RL04N253-0	COIL	
L9	RLQZP1R0MT-Y	COIL	
L10	RL04N125-0	COIL	
L11	RLQZP181KT-Y	COIL	
L12	RLQZP680KT-Y	COIL	
L13	RL04N125-0	COIL	
L14	RLQZP220KT-Y	COIL	<G>
L15	RLQZP6R8KT-Y	COIL	
L16	RLQZP1R0MT-Y	COIL	
L17	RLQZPR47MT-Y	COIL	
L18	RLQZP221KT-Y	COIL	
L19	RLQZPR47MT-Y	COIL	
L20	RLQY15G5-0	COIL	
L21	RLQZP101KT-Y	COIL	
L22	RLQZP470KT-Y	COIL	
L23	RLQZP101KT-Y	COIL	
L24	RL03A001-T	COIL	
L27	RLF6019-0	ANT COIL	
		TRANSFORMERS	
T1	RL12A004-T	TRANSFORMER	
T2	RLA6C1-T	TRANSFORMER	
T3	RLA3Z11-0	TRANSFORMER	
T4	RL13A4-M	TRANSFORMER	
T5	RL13A4-M	TRANSFORMER	
T6	RL14A4-M	TRANSFORMER	
T7	RL13A3-T	TRANSFORMER	
T8	RL12A35-T	TRANSFORMER	
T10	RL12A002-T	TRANSFORMER	
T11	RL14A33-T	TRANSFORMER	
T12	RL12A003-M	TRANSFORMER	
T13	RL09A11-T	TRANSFORMER	
		FILTERS	
CF1	RVFSFE107MAR	CERAMIC FILTER	
CF2	RVFSFR450I1	CERAMIC FILTER	<G>
CF2	RLFASFR459I1	CERAMIC FILTER	<EG>
CF3	RVFSFE107MAR	CERAMIC FILTER	
XF1	RVX55M845A	FILTER	

Ref. No.	Part No.	Part Name & Description	Remarks
		OSCILLATORS	
X1	RSXB55M4W01	OSCILLATOR	<G>
X1	RSXB55M3W01	OSCILLATOR	<EG>
X2	RSXZ450KM01	OSCILLATOR	<G>
X2	RSXZ459KM01	OSCILLATOR	<EG>
X201	RSXD150KS01	OSCILLATOR	
		JUMPER	
RJ1	RRD18XK000V	CHIP JUMPER	
RJ2	RRD18XK000V	CHIP JUMPER	
RJ4	RRJ6GCJ000TE	CHIP JUMPER	
RJ5	RRD18XK000V	CHIP JUMPER	
RJ6	RRJ6GCJ000TE	CHIP JUMPER	
RJ7	RRJ6GCJ000TE	CHIP JUMPER	
RJ8	RRJ6GCJ000TE	CHIP JUMPER	
RJ207	RRJ6GCJ000TE	CHIP JUMPER	
RJ208	RRJ6GCJ000TE	CHIP JUMPER	
RJ209	RRJ6GCJ000TE	CHIP JUMPER	
		TRIMMER CAPACITORS	
CT1	RCV10AF1-S	TRIMMER CAPACITOR	
CT201	RCV20AF1-S	TRIMMER CAPACITOR	
		SWITCHES	
S1	RSS2B43YA-M	SW, DX-LOCAL	
S2	QSS1228A	SW, 9K/10K	
S3	RSS2B004-Q	SW, TONE	
S4	EVQWWHF1025B	SW, ENCODER	
S101	RSS2B36ZA-M	SW, SSB	
S201	RSS2B40ZA-Q	SW, HOLD	
S202	RSS3B32ZA-A	SW, SLOW/FAST	
		TERMINALS	
J1	RJJD3M8ZA-C	JACK, EARPHONES	
J2	RJJD5M2ZA-H	JACK, EXT ANT	<G>
J3	RJJ1B1ZC-C	JACK, DC IN	
		DISPLAYS	
LCD1	HLC9340	LCD	

Notes : * Important safety notice:
Components identified by ⚠ mark have special characteristics important for safety. When replacing any of these components use only manufacturer's specified parts.
* Bracketed indications in Ref. No. columns specify the area. (Refer to the first page for area.)
Parts without these indications can be used for all areas.

Ref. No.	Part No.	Part Name & Description	Remarks
		CABINET AND CHASSIS	
1	RBC1029ZB-0	BUTTON, MANUAL TUNING (UP)	
2	RGV0011-K	KNOB, SSB	
3	RYFFB65DG	REAR CABINET ASS'Y	<G>
3	RYFFB65DEG	REAR CABINET ASS'Y	<EG>
3A	RHG384ZA-0	RUBBER	
4	RKL30ZA	STAND	
5	RUQ52ZA	SPRING	
6	RYNFB65DG	BATTERY COMPARTMENT	
7	RBT260ZA-0	KNOB, FINE/VOL	
8	RJP4G18ZA	CONNECTOR	
9	RJP6G18ZA	CONNECTOR	
10	RJS20Q5ZA	CONNECTOR	
11	RJT1073ZA	ANT, TERMINAL	
12	RSC0018	SHIERD PLATE	
13	RSC0019	SHIERD PLATE	
14	RSC0020	SHIERD PLATE	
15	RSC0021	SHIERD PLATE	
16	RSC0036	SHIERD PLATE	
17	XSHR17+2FZ	SCREW	
18	RHS32ZA	TAPE	
19	RJC3F0010ZC	TERMINAL	
20	RJC70012ZA	BATT. SPRING	
21	RJC70013ZA	BATT. SPRING	
22	RMK0022-K	CHASSIS	<G>
22	RMK0022A-K	CHASSIS	<EG>
23	RUQ52ZA	SPRING	
24	RJC70014ZA	BATT. SPRING	
25	RGX1659ZA-0	PLATE	
26	RHG5043ZA	RUBBER	
27	RHG5044ZA	RUBBER	
28	RHG5045ZA	RUBBER	
29	RHG5047ZA	RUBBER	
30	RMC1099ZA	SHIELD PLATE	
31	RMC1100ZA	SHIELD PLATE	
32	RMC1101ZA	SHIELD PLATE	
33	RMC1105ZA	SHIELD PLATE	
34	RMC1115ZA	SHIELD PLATE	
35	RSC0017	LCD HORDER	
36	RSC0037	SHIELD PLATE	
37	RUP2118ZAM	F. P. C	
38	RJS6L4ZA	CONNECTOR (6P)	
39	RJT807ZB-X	TERMINAL	
40	WBB6GB-14	FLAT CABLE WIRE	
41	RJSS4L4ZA-X	SOCKET	

Ref. No.	Part No.	Part Name & Description	Remarks
42	EAS8P24S	SPEAKER	
43	RBC1023PA-0	BUTTON, (.)	
44	RBC1023QA-0	BUTTON, (0)	
45	RBC1023RA-0	BUTTON, (9)	
46	RBC1023SA-0	BUTTON, (8)	
47	RBC1023TA-0	BUTTON, (7)	
48	RBC1023UA-0	BUTTON, (6)	
49	RBC1023VA-0	BUTTON, (5)	
50	RBC1023WA-0	BUTTON, (4)	
51	RBC1023XA-0	BUTTON, (3)	
52	RBC1023YA-0	BUTTON, (2)	
53	RBC1023ZA-0	BUTTON, (1)	
54	RBC10230A-0	BUTTON, (M)	
55	RBC1024WB-0	BUTTON, BAND(SW)	
56	RBC1024XB-0	BUTTON, BAND(MW)	
57	RBC1024YB-0	BUTTON, BAND(LW)	
58	RBC1024ZB-0	BUTTON, BAND(FM)	
59	RBC1025ZA-0	BUTTON, STAND BY	
60	RBC1026YB-0	BUTTON, ACCESS(METER)	
61	RBC1026ZB-0	BUTTON, ACCESS(FREQ.)	
62	RBC1027ZA-0	BUTTON, DIAL TIME	
63	RBC1028ZB-0	BUTTON, MANUAL TUNING	
64	RBC1030ZA-0	BUTTON, CLOCK/FREQ.	
65	RBC1031ZB-0	BUTTON, POWER OFF	
66	RBC1032ZB-0	BUTTON, ENTER	
67	RBC1033ZA-0	BUTTON, SLEEP	
68	RBC1034ZB-0	BUTTON, POWER ON	
69	RBC1041ZA-0	BUTTON, TIME SET	
70	RBD429ZA-0	KNOB, SLOW FAST	
71	RBD430ZA-0	KNOB, HOLD	
72	RBD431ZA-0	KNOB, OPEN	
73	RBN754ZA-0	KNOB, ROTARY TUNING	
74	RBT284ZA-0	KNOB, ROTARY TUNING	
75	RHM156ZA	STEEL BALL	
76	RHR2110ZA	SPACER	
77	RHR3102ZA-0	LEVER	
78	RKH146ZA-0	CARRING STRAP	
79	RMS12B	HOLDER	
80	RUQ53ZA	SPRING	
81	XUC3FY-V	C. RING	
82	RYPFB65DG	STATION REMINDER	
83	RYMFB65DG	FRONT CABINET ASS'Y	<G>
83	RYMFB65DEG	FRONT CABINET ASS'Y	<EG>
84	RHE5128ZA	SCREW	
85	WWBB4GB-6	FLAT CABLE	
86	RHG1041ZA	RUBBER	
87	RHG1115ZA	RUBBER	

Ref. No.	Part No.	Part Name & Description	Remarks
88	RHG1175ZA	RUBBER	
89	RHG2119ZA	RUBBER	
90	XEARS147GA-Y	TELESCOPIC ANTNNA	
91	XTNR2+5C	SCREW	
92	XTN26+14JFZ	SCREW	
93	XTN26+8C	SCREW	
94	XYN3+C8FZ	SCREW	
95	RKK319ZA-0	BATTERY COMPARTMENT	
		ACCESSORIES	
A1	RD9496XR	AC ADAPTOR	<G> ⚠
A1	RD9496SXGR	AC ADAPTOR	<EG> ⚠
A2	RFC0003	SHOLDER BAG	<G>
A2	RFC0004	SHOLDER BAG	<EG>
A3	RJP120ZDS-K	PLUG	<G> ⚠
A4	RQT0046G	INSTRUCTION MANUAL	<G>
A4	RQT0046B	INSTRUCTION MANUAL	<EG>
A5	RQX9412ZA	MEMORY CHANNEL SHEET	<G>
A5	RQX9436YA	MEMORY CHANNEL SHEET	<EG>
A6	RQX9454ZA	SHORT WAVE GUIDE	
A7	RSA0002	EXTERNAL ANTTENA LEAD	<G>
A8	XEH1A1-X	EARPHONE	
		PACKING MATERIAL	
P1	RPE6822A	COVER	
P2	RPH554ZA	POLYETHYLENE COVER	
P3	RPK0030	SLEEVE	<G>
P3	RPK0032	SLEEVE	<EG>
P4	RPN5131ZA	PAD (SET)	
P5	RPN5360ZA	PAD (AC ADAPTOR)	

CABINET PARTS LOCATION

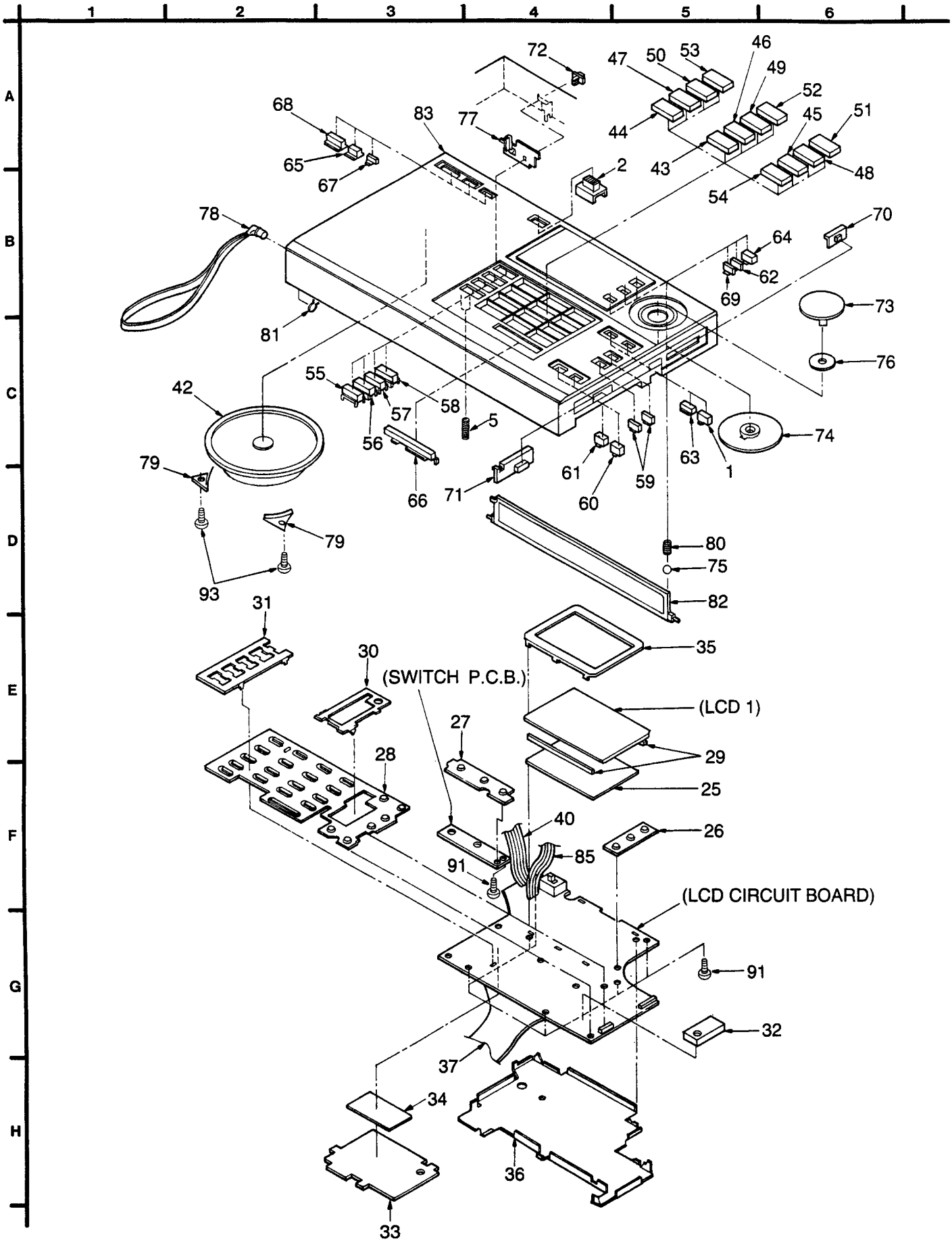

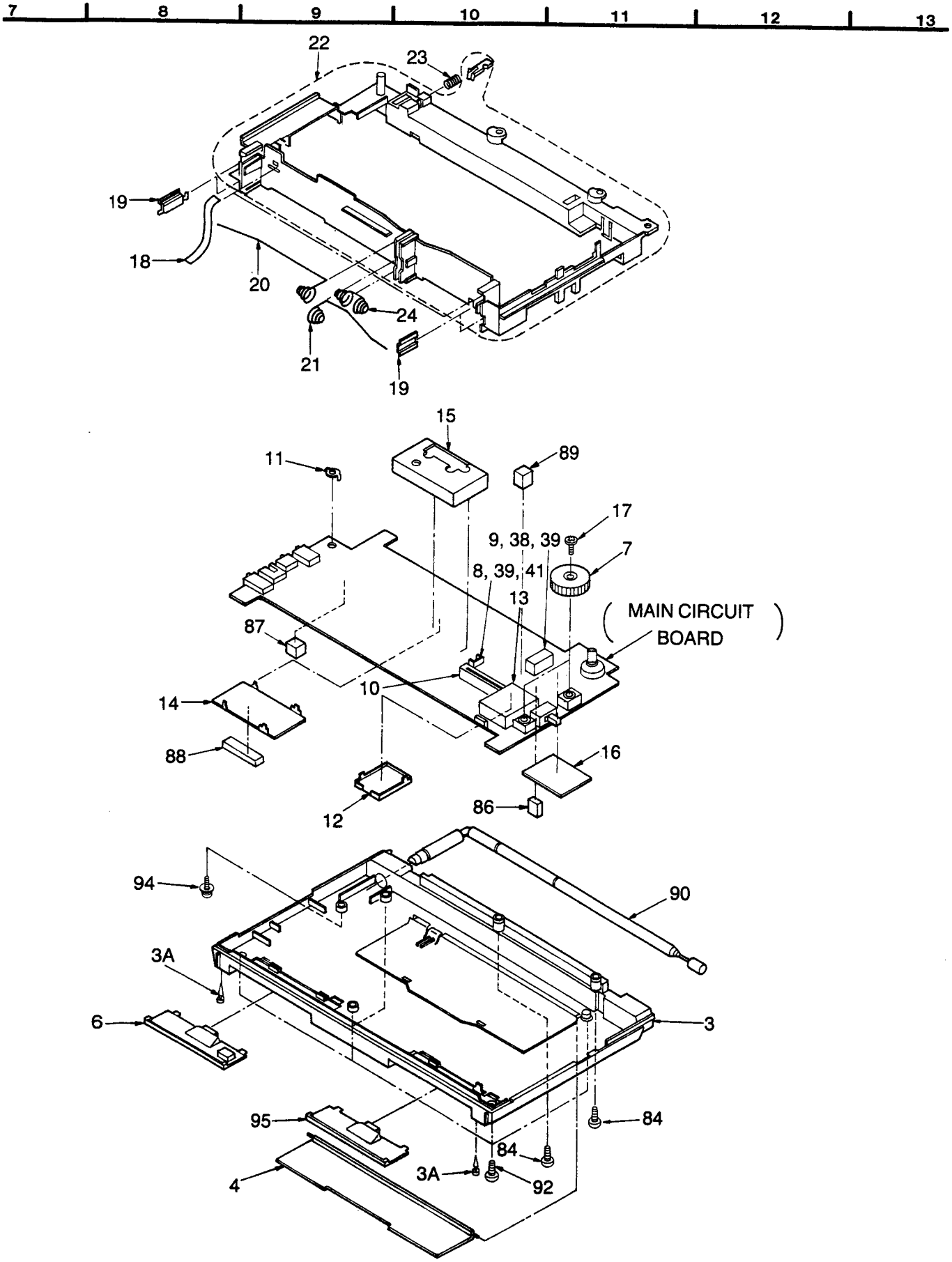
7
8
9
10
11
12
13
22
23
19
18
20
24
21
19
15
11
89
17
9, 38, 39
7
8, 39, 41
13
MAIN CIRCUIT BOARD
87
10
14
88
16
12
86
94
90
3A
6
3
95
84
84
3A
92
4

RESISTORS & CAPACITORS

Notes : * Important safety notice :
Components identified by ⚠ mark have special characteristics important for safety. When replacing any of these components use only manufacturer's specified parts.
* Bracketed indications in Ref. No. columns specify the area. (Refer to the first page for area.)
Parts without these indications can be used for all areas.

Numbering System For Resistors

Example:

ERD	25	F	J	102
Type	Wattage (1/4W)	Shape	Tolerance	Value (1KΩ)
ERX	2	AN	J	471
Type	Wattage (2W)	Shape	Tolerance	Value (470Ω)

Numbering System For Capacitors

Example:

ECKD	1H	102	Z	F
Type	Voltage (50V)	Value (0.001μF)	Tolerance	Unique
ECEA	50	M	330	
Type	Voltage (50V)	Characteristics	Value (33μF)	

- Capacity values are in microfarads (μF) unless specified otherwise, P = Pico-farads (pF) F = Farads (F).
- Resistance values are in ohms (Ω), unless specified otherwise, 1K = 1,000Ω, 1M = 1,000kΩ

Resistor Type	Wattage		Tolerance
ERD : Carbon	10 : 1/8W	12 : 1/2W	J : ±5%
ERG : Metal Oxide	14 : 1/4W	25 : 1/4W	F : ±1%
ERQ : Fuse Type Metal	1A : 1W	18 : 1/8W	G : ±2%
ERX : Metal Film	S2 : 1/4W	S1 : 1/2W	J : ±5%
ERD L : Carbon (chip)	2F : 1/4W	50 : 1/2W	K : ±10%
ERO K : Metal Film (chip)	2A : 2W	3A : 3W	M : ±20%
ERC : Solid	6G : 1/10W	8G : 1/8W	
ERF : Incombustible Box-Shaped			
ERM : Wire-Wound			
RRJ : Chip Resistor			
ERJ : Chip Resistor			

Capacitor Type	Voltage		Tolerance
ECE : Electrolytic	0J : 6.3V	1A : 10V	K : ±10%
ECCD : Ceramic	1C : 16V	1E : 25V	M : ±20%
ECKD : Ceramic Capacitor	1H : 50V	1V : 35V	Z : +80 −20 %
ECQM : Polyester	50 : 50V	05 : 50V	
ECQP : Polypropylene	2H : 500V	2A : 100V	J : ±5%
ECG : Ceramic	1 : 100V	1J : 63V	G : ±2%
ECEA N : Non Polar Electrolytic	KC : 400V AC		F : ±1%
QCU : Ceramic (Chip Type)	KC : 125V AC (UL)		C : ±0.25pF
ECUX : Ceramic (Chip Type)			D : ±0.5pF
ECF : Semiconductor			
EECW : Liquid electrolyte double layer capacitor			

Ref. No.	Part No.	Part Name & Description	Remarks
		RESISTORS	
R1	RRJ6GCJ102TE	RESISTOR 1/10 W	
R2	RRJ6GCJ222TE	RESISTOR 1/10 W 1K	
R3	RRJ6GCJ101TE	RESISTOR 1/10 W 2.2K	
R4	RRJ6GCJ220TE	RESISTOR 1/10 W 100	
R5	RRJ6GCJ104TE	RESISTOR 1/10 W 100K	
R6	RRJ6GCJ103TE	RESISTOR 1/10 W 10K	
R7	RRJ6GCJ104TE	RESISTOR 1/10 W 100K	
R9	RRJ6GCJ220TE	RESISTOR 1/10 W 22	
R10	RRJ6GCJ221TE	RESISTOR 1/10 W 220	
R11	RRJ6GCJ103TE	RESISTOR 1/10 W 10K	
R12	RRJ6GCJ220TE	RESISTOR 1/10 W 22	
R14	RRJ6GCJ104TE	RESISTOR 1/10 W 100K	
R15	RRJ6GCJ102TE	RESISTOR 1/10 W 1K	
R16	RRJ6GCJ101TE	RESISTOR 1/10 W 100	
R17	RRJ6GCJ102TE	RESISTOR 1/10 W 1K	
R18	RRJ6GCJ104TE	RESISTOR 1/10 W 100K	
R19	RRJ6GCJ470TE	RESISTOR 1/10 W 47	
R20	RRJ6GCJ221TE	RESISTOR 1/10 W 220	
R21	RRJ6GCJ101TE	RESISTOR 1/10 W 100	
R22	RRJ6GCJ101TE	RESISTOR 1/10 W 100	
R23	RRJ6GCJ102TE	RESISTOR 1/10 W 1K	
R24	RRJ6GCJ101TE	RESISTOR 1/10 W 100	
R25	RRJ6GCJ102TE	RESISTOR 1/10 W 1K	
R26	RRJ6GCJ333TE	RESISTOR 1/10 W 33K	
R27	RRJ6GCJ101TE	RESISTOR 1/10 W 100	

Ref. No.	Part No.	Part Name & Description	Remarks
R28	RRJ6GCJ103TE	RESISTOR 1/10 W 10K	
R29	RRJ6GCJ562TE	RESISTOR 1/10 W 5.6K	
R30	RRJ6GCJ470TE	RESISTOR 1/10 W 47	
R31	RRJ6GCJ104TE	RESISTOR 1/10 W 100K	<G>
R32	RRJ6GCJ332TE	RESISTOR 1/10 W 3.3K	
R33	RRJ6GCJ470TE	RESISTOR 1/10 W 47	
R34	RRJ6GCJ331TE	RESISTOR 1/10 W 330	<G>
R35	RRJ6GCJ224TE	RESISTOR 1/10 W 220K	
R36	RRJ6GCJ470TE	RESISTOR 1/10 W 47	<G>
R37	RRJ6GCJ101TE	RESISTOR 1/10 W 100	
R38	RRJ6GCJ101TE	RESISTOR 1/10 W 100	
R40	RRJ6GCJ220TE	RESISTOR 1/10 W 22	
R41	RRJ6GCJ223TE	RESISTOR 1/10 W 22K	
R42	RRJ6GCJ152TE	RESISTOR 1/10 W 22K	
R43	RRJ6GCJ473TE	RESISTOR 1/10 W 47K	
R44	RRJ6GCJ101TE	RESISTOR 1/10 W 100	
R45	RRJ6GCJ102TE	RESISTOR 1/10 W 1K	
R46	RRJ6GCJ223TE	RESISTOR 1/10 W 22K	
R47	RRJ6GCJ103TE	RESISTOR 1/10 W 10K	
R48	RRJ6GCJ101TE	RESISTOR 1/10 W 100	
R49	RRJ6GCJ332TE	RESISTOR 1/10 W 33K	
R50	RRJ6GCJ102TE	RESISTOR 1/10 W 1K	
R51	RRJ6GCJ473TE	RESISTOR 1/10 W 47K	
R52	RRJ6GCJ101TE	RESISTOR 1/10 W 100	
R53	RRJ6GCJ470TE	RESISTOR 1/10 W 47	
R54	RRJ6GCJ220TE	RESISTOR 1/10 W 22	
R55	RRJ6GCJ224TE	RESISTOR 1/10 W 220K	
R56	RRJ6GCJ101TE	RESISTOR 1/10 W 100	

Ref. No.	Part No.	Part Name & Description	Remarks
R57	RRJ6GCJ220TE	RESISTOR 1/10 W 22	
R58	RRJ6GCJ224TE	RESISTOR 1/10 W 220K	
R59	RRJ6GCJ103TE	RESISTOR 1/10 W 10K	
R60	RRJ6GCJ104TE	RESISTOR 1/10 W 100K	
R61	RRJ6GCJ472TE	RESISTOR 1/10 W 4.7K	
R62	RRJ6GCJ223TE	RESISTOR 1/10 W 22K	
R63	RRJ6GCJ104TE	RESISTOR 1/10 W 100K	
R64	RRJ6GCJ103TE	RESISTOR 1/10 W 10K	
R65	RRJ6GCJ103TE	RESISTOR 1/10 W 10K	
R66	RRJ6GCJ222TE	RESISTOR 1/10 W 2.2K	
R67	RRJ6GCJ472TE	RESISTOR 1/10 W 4.7K	
R68	RRJ6GCJ103TE	RESISTOR 1/10 W 10K	
R69	RRJ6GCJ103TE	RESISTOR 1/10 W 10K	
R71	RRJ6GCJ221TE	RESISTOR 1/10 W 220	
R72	RRJ6GCJ103TE	RESISTOR 1/10 W 10K	
R73	RRJ6GCJ471TE	RESISTOR 1/10 W 470	
R74	RRJ6GCJ473TE	RESISTOR 1/10 W 47K	
R75	RRJ6GCJ562TE	RESISTOR 1/10 W 5.6K	
R76	RRJ6GCJ272TE	RESISTOR 1/10 W 2.7K	
R77	RRJ6GCJ471TE	RESISTOR 1/10 W 470	
R78	RRJ6GCJ471TE	RESISTOR 1/10 W 470	
R79	RRJ6GCJ332TE	RESISTOR 1/10 W 3.3K	
R80	RRJ6GCJ222TE	RESISTOR 1/10 W 2.2K	
R81	RRJ6GCJ102TE	RESISTOR 1/10 W 1K	
R82	RRJ6GCJ471TE	RESISTOR 1/10 W 470	
R83	RRJ6GCJ331TE	RESISTOR 1/10 W 330	
R84	RRJ6GCJ470TE	RESISTOR 1/10 W 47	
R85	RRJ6GCJ102TE	RESISTOR 1/10 W 1K	
R86	RRJ6GCJ332TE	RESISTOR 1/10 W 3.3K	
R87	RRJ6GCJ471TE	RESISTOR 1/10 W 470	
R88	RRJ6GCJ562TE	RESISTOR 1/10 W 5.6K	
R89	RRJ6GCJ101TE	RESISTOR 1/10 W 100	
R90	RRJ6GCJ103TE	RESISTOR 1/10 W 10K	
R91	RRJ6GCJ331TE	RESISTOR 1/10 W 330	
R92	RRJ6GCJ562TE	RESISTOR 1/10 W 5.6K	
R93	RRJ6GCJ332TE	RESISTOR 1/10 W 3.3K	
R94	RRJ6GCJ101TE	RESISTOR 1/10 W 100	
R95	RRJ6GCJ101TE	RESISTOR 1/10 W 100	
R97	RRJ6GCJ471TE	RESISTOR 1/10 W 470	
R98	RRJ6GCJ223TE	RESISTOR 1/10 W 22K	
R99	RRJ6GCJ224TE	RESISTOR 1/10 W 220K	
R100	RRJ6GCJ682TE	RESISTOR 1/10 W 6.8K	
R101	RRJ6GCJ332TE	RESISTOR 1/10 W 3.3K	
R102	RRJ6GCJ102TE	RESISTOR 1/10 W 1K	
R103	RRJ6GCJ471TE	RESISTOR 1/10 W 470	
R104	RRJ6GCJ471TE	RESISTOR 1/10 W 470	
R105	RRJ6GCJ223TE	RESISTOR 1/10 W 22K	
R106	RRJ6GCJ223TE	RESISTOR 1/10 W 22K	
R107	RRJ6GCJ152TE	RESISTOR 1/10 W 1.5K	
R108	RRJ6GCJ223TE	RESISTOR 1/10 W 22K	
R109	RRJ6GCJ473TE	RESISTOR 1/10 W 47K	
R110	RRJ6GCJ102TE	RESISTOR 1/10 W 1K	

Ref. No.	Part No.	Part Name & Description	Remarks
R111	RRJ6GCJ222TE	RESISTOR 1/10 W 2.2K	
R112	RRJ6GCJ473TE	RESISTOR 1/10 W 47K	
R113	RRJ6GCJ224TE	RESISTOR 1/10 W 220K	
R114	RRJ6GCJ473TE	RESISTOR 1/10 W 47K	
R115	RRJ6GCJ272TE	RESISTOR 1/10 W 2.7K	
R116	RRJ6GCJ152TE	RESISTOR 1/10 W 1.5K	
R117	RRJ6GCJ471TE	RESISTOR 1/10 W 470	
R118	RRJ6GCJ153TE	RESISTOR 1/10 W 15K	
R119	RRJ6GCJ471TE	RESISTOR 1/10 W 470	
R120	RRJ6GCJ333TE	RESISTOR 1/10 W 33K	
R121	RRJ6GCJ333TE	RESISTOR 1/10 W 33K	
R122	RRJ6GCJ470TE	RESISTOR 1/10 W 47	
R123	RRJ6GCJ332TE	RESISTOR 1/10 W 3.3K	
R124	RRJ6GCJ103TE	RESISTOR 1/10 W 10K	
R125	RRJ6GCJ222TE	RESISTOR 1/10 W 2.2K	
R126	RRJ6GCJ103TE	RESISTOR 1/10 W 10K	
R127	RRJ6GCJ222TE	RESISTOR 1/10 W 2.2K	
R128	RRJ6GCJ152TE	RESISTOR 1/10 W 1.5K	
R129	RRJ6GCJ103TE	RESISTOR 1/10 W 10K	
R130	RRJ6GCJ473TE	RESISTOR 1/10 W 47K	
R131	RRJ6GCJ470TE	RESISTOR 1/10 W 47	
R132	RRJ6GCJ223TE	RESISTOR 1/10 W 22K	
R133	RRJ6GCJ470TE	RESISTOR 1/10 W 47	
R134	RRJ6GCJ221TE	RESISTOR 1/10 W 220	
R135	RRJ6GCJ562TE	RESISTOR 1/10 W 5.6K	
R138	RRJ6GCJ223TE	RESISTOR 1/10 W 22K	
R139	RRJ6GCJ223TE	RESISTOR 1/10 W 22K	
R140	RRJ6GCJ272TE	RESISTOR 1/10 W 2.7K	
R141	RRJ6GCJ153TE	RESISTOR 1/10 W 15K	
R142	RRJ6GCJ153TE	RESISTOR 1/10 W 15K	
R143	RRJ6GCJ473TE	RESISTOR 1/10 W 47K	
R144	RRJ6GCJ104TE	RESISTOR 1/10 W 100K	
R145	RRJ6GCJ104TE	RESISTOR 1/10 W 100K	
R146	RRJ6GCJ104TE	RESISTOR 1/10 W 100K	
R147	RRJ6GCJ223TE	RESISTOR 1/10 W 22K	
R201	RRJ6GCJ102TE	RESISTOR 1/10 W 1K	
R202	RRJ6GCJ102TE	RESISTOR 1/10 W 1K	
R204	RRJ6GCJ102TE	RESISTOR 1/10 W 1K	
R205	RRJ6GCJ473TE	RESISTOR 1/10 W 47K	
R206	RRJ6GCJ473TE	RESISTOR 1/10 W 47K	
R207	RRJ6GCJ473TE	RESISTOR 1/10 W 47K	
R208	RRJ6GCJ394TE	RESISTOR 1/10 W 390K	
R209	RRJ6GCJ184TE	RESISTOR 1/10 W 180K	
R210	RRJ6GCJ823TE	RESISTOR 1/10 W 82K	
R211	RRJ6GCJ273TE	RESISTOR 1/10 W 27K	
R212	RRJ6GCJ822TE	RESISTOR 1/10 W 8.2K	
R213	RRJ6GCJ472TE	RESISTOR 1/10 W 4.7K	
R214	RRJ6GCJ223TE	RESISTOR 1/10 W 22K	
R217	RRJ6GCJ272TE	RESISTOR 1/10 W 2.7K	
R218	RRJ6GCJ153TE	RESISTOR 1/10 W 15K	
R220	RRJ6GCJ102TE	RESISTOR 1/10 W 1K	
R221	RRJ6GCJ103TE	RESISTOR 1/10 W 10K	

Ref. No.	Part No.	Part Name & Description	Remarks
R218	RRJ6GCJ153TE	RESISTOR 1/10 W 15K	
R220	RRJ6GCJ102TE	RESISTOR 1/10 W 1K	
R221	RRJ6GCJ103TE	RESISTOR 1/10 W 10K	
R222	RRJ6GCJ103TE	RESISTOR 1/10 W 10K	
R223	RRJ6GCJ103TE	RESISTOR 1/10 W 10K	
R224	RRJ6GCJ103TE	RESISTOR 1/10 W 10K	
R225	RRJ6GCJ103TE	RESISTOR 1/10 W 10K	
R226	RRJ6GCJ470TE	RESISTOR 1/10 W 47	
R227	RRJ6GCJ103TE	RESISTOR 1/10 W 10K	
R228	RRJ6GCJ103TE	RESISTOR 1/10 W 10K	
R229	RRJ6GCJ103TE	RESISTOR 1/10 W 10K	
R230	RRJ6GCJ103TE	RESISTOR 1/10 W 10K	
R231	RRJ6GCJ473TE	RESISTOR 1/10 W 47K	
R232	RRJ6GCJ332TE	RESISTOR 1/10 W 3.3K	
R233	RRJ6GCJ331TE	RESISTOR 1/10 W 330	
R234	RRJ6GCJ104TE	RESISTOR 1/10 W 100K	
R235	RRJ6GCJ103TE	RESISTOR 1/10 W 10K	
R236	RRJ6GCJ102TE	RESISTOR 1/10 W 1K	
R237	RRJ6GCJ182TE	RESISTOR 1/10 W 1.8K	
R238	RRJ6GCJ102TE	RESISTOR 1/10 W 1K	
R239	RRJ6GCJ330TE	RESISTOR 1/10 W 33	
R240	RRJ6GCJ101TE	RESISTOR 1/10 W 100	
R242	RRJ6GCJ104TE	RESISTOR 1/10 W 100K	
R243	RRJ6GCJ564TE	RESISTOR 1/10 W 560K	
R244	RRJ6GCJ102TE	RESISTOR 1/10 W 1K	
R245	RRJ6GCJ471TE	RESISTOR 1/10 W 470	
R246	RRJ6GCJ473TE	RESISTOR 1/10 W 47K	
R247	RRJ6GCJ473TE	RESISTOR 1/10 W 47K	
R248	RRJ6GCJ473TE	RESISTOR 1/10 W 47K	
R249	RRJ6GCJ473TE	RESISTOR 1/10 W 47K	
R250	RRJ6GCJ473TE	RESISTOR 1/10 W 47K	
R251	RRJ6GCJ103TE	RESISTOR 1/10 W 10K	
R252	RRJ6GCJ103TE	RESISTOR 1/10 W 10K	
R253	RRJ6GCJ473TE	RESISTOR 1/10 W 47K	
R254	RRJ6GCJ473TE	RESISTOR 1/10 W 47K	
R255	RRJ6GCJ103TE	RESISTOR 1/10 W 10K	
R256	RRJ6GCJ103TE	RESISTOR 1/10 W 10K	
R257	RRJ6GCJ105TE	RESISTOR 1/10 W 1M	
R258	RRJ6GCJ223TE	RESISTOR 1/10 W 22K	
R259	RRJ6GCJ223TE	RESISTOR 1/10 W 22K	<G>
R260	RRJ6GCJ223TE	RESISTOR 1/10 W 22K	
R261	RRJ6GCJ473TE	RESISTOR 1/10 W 47K	
R262	RRJ6GCJ103TE	RESISTOR 1/10 W 10K	
R263	RRJ6GCJ103TE	RESISTOR 1/10 W 10K	
R264	RRJ6GCJ103TE	RESISTOR 1/10 W 10K	
R265	RRJ6GCJ473TE	RESISTOR 1/10 W 47K	
R266	RRJ6GCJ103TE	RESISTOR 1/10 W 10K	
R267	RRJ6GCJ473TE	RESISTOR 1/10 W 47K	
R268	RRJ6GCJ103TE	RESISTOR 1/10 W 10K	
R269	RRJ6GCJ473TE	RESISTOR 1/10 W 47K	
R270	RRJ6GCJ103TE	RESISTOR 1/10 W 10K	
R271	RRJ6GCJ473TE	RESISTOR 1/10 W 47K	

Ref. No.	Part No.	Part Name & Description	Remarks
R272	RRJ6GCJ103TE	RESISTOR 1/10 W 10K	
R273	RRJ6GCJ103TE	RESISTOR 1/10 W 10K	
R274	RRJ6GCJ103TE	RESISTOR 1/10 W 10K	
R275	RRJ6GCJ103TE	RESISTOR 1/10 W 10K	
R277	RRJ6GCJ333TE	RESISTOR 1/10 W 33K	
R278	RRJ6GCJ104TE	RESISTOR 1/10 W 100K	
R279	RRJ6GCJ333TE	RESISTOR 1/10 W 33K	
R280	RRJ6GCJ104TE	RESISTOR 1/10 W 100K	
R281	RRJ6GCJ473TE	RESISTOR 1/10 W 47K	
R282	RRJ6GCJ473TE	RESISTOR 1/10 W 47K	
R283	RRJ6GCJ471TE	RESISTOR 1/10 W 470	
R285	RRJ6GCJ681TE	RESISTOR 1/10 W 680	
R286	RRJ6GCJ103TE	RESISTOR 1/10 W 10K	
R287	RRJ6GCJ103TE	RESISTOR 1/10 W 10K	
R288	RRJ6GCJ103TE	RESISTOR 1/10 W 10K	
R289	RRJ6GCJ103TE	RESISTOR 1/10 W 10K	
R290	RRJ6GCJ103TE	RESISTOR 1/10 W 10K	
R292	RRJ6GCJ223TE	RESISTOR 1/10 W 22K	<EG>
R294	RRJ6GCJ153TE	RESISTOR 1/10 W 15K	
R295	RRJ6GCJ105TE	RESISTOR 1/10 W 1M	
		CAPACITOR	
C1	ECEA1CK100I	CAPACITOR 16 V 10	
C2	RCUV1H070DC	CAPACITOR 50 V 7P	
C3	RCUV1H820KC	CAPACITOR 50 V 2P	
C4	RCUV1E103MD	CAPACITOR 25 V 0.01	
C5	RCUV1H472MD	CAPACITOR 50 V 0.0047	
C6	RCUV1H050DC	CAPACITOR 50 V 5P	
C7	ECEA1CK100I	CAPACITOR 16 V 10	
C8	RCUV1H680KC	CAPACITOR 50 V 68P	
C9	RCUV1H390KC	CAPACITOR 50 V 39P	
C10	RCUV1H103ZF	CAPACITOR 50 V 0.01	
C11	RCUV1H470KC	CAPACITOR 50 V 47P	
C12	RCUV1E223MD	CAPACITOR 25 V 0.022	
C13	RCUV1H020CC	CAPACITOR 50 V 2P	
C14	RCUV1H020CC	CAPACITOR 50 V 2P	
C15	RCUV1H102MD	CAPACITOR 50 V 0.001	
C16	RCUV1E223MD	CAPACITOR 25 V 0.022	
C17	ECEA1CK100I	CAPACITOR 16 V 10	
C18	RCUV1E103MD	CAPACITOR 25 V 0.01	
C19	RCUV1H150KC	CAPACITOR 50 V 15P	
C20	RCUV1H050DC	CAPACITOR 50 V 5P	
C21	RCUV1H390KC	CAPACITOR 50 V 39P	
C22	RCUV1H220KC	CAPACITOR 50 V 22P	
C23	RCUV1H102MD	CAPACITOR 50 V 0.001	
C24	RCUV1H100KC	CAPACITOR 50 V 10P	
C25	RCUV1H472MD	CAPACITOR 50 V 0.0047	
C26	RCUV1H472MD	CAPACITOR 50 V 0.0047	
C27	RCUV1H472MD	CAPACITOR 50 V 0.0047	
C28	RCUV1H050DC	CAPACITOR 50 V 5P	
C29	RCUV1H103ZF	CAPACITOR 50 V 0.01	

Ref. No.	Part No.	Part Name & Description	Remarks
C30	RCUV1H472MD	CAPACITOR 50 V 0.0047	
C31	RCUV1E103MD	CAPACITOR 25 V 0.01	
C32	RCUV1H680KC	CAPACITOR 50 V 68P	
C33	ECEA0GK470I	CAPACITOR 4 V 47	
C34	RCUV1H680KC	CAPACITOR 50 V 68P	
C35	RCUV1H472MD	CAPACITOR 50 V 0.0047	
C36	RCUV1H220KC	CAPACITOR 50 V 22P	
C37	RCUV1H150KC	CAPACITOR 50 V 15P	
C38	RCUV1H103ZF	CAPACITOR 50 V 0.01	
C39	ECEA1CK100I	CAPACITOR 16 V 10	
C40	RCUV1H030CC	CAPACITOR 50 V 3P	
C41	RCUV1H221K	CAPACITOR 50 V 220P	<G>
C42	RCUV1H472MD	CAPACITOR 50 V 0.0047	
C43	RCUV1H681K	CAPACITOR 50 V 680P	<G>
C44	RCUV1H103ZF	CAPACITOR 50 V 0.001	
C45	RCUV1H020CC	CAPACITOR 50 V 2P	
C46	ECEA1CK100I	CAPACITOR 16 V10	
C47	RCUV1H103ZF	CAPACITOR 50 V 0.01	
C48	RCUV1H221K	CAPACITOR 50 V 220	
C49	RCUV1H103ZF	CAPACITOR 50 V 0.01	
C50	RCUV1H103ZF	CAPACITOR 50 V 0.01	
C51	ECEA1HKR47I	CAPACITOR 50 V 0.47	
C52	RCUV1H102MD	CAPACITOR 50 V 0.001	
C53	RCUV1E103MD	CAPACITOR 25 V 0.01	
C54	ECEA0JK220I	CAPACITOR 6.3V 22	
C55	RCUV1H030CC	CAPACITOR 50 V 3P	
C56	ECEA1HKR47I	CAPACITOR 50 V 0.47	
C57	ECEA1CK100I	CAPACITOR 16 V 10	
C58	RCUV1H050DC	CAPACITOR 50 V 5P	
C59	RCUV1H330KC	CAPACITOR 50 V 5P	
C60	ECEA1CK100I	CAPACITOR 16 V 10	
C61	ECEA1HK010I	CAPACITOR 50 V 1	
C62	RCUV1H102MD	CAPACITOR 50 V 0.001	
C63	RCUV1H103ZF	CAPACITOR 50 V 0.01	
C64	RCUV1H103ZF	CAPACITOR 50 V 0.01	
C65	RCUV1E103MD	CAPACITOR 25 V 0.01	
C66	ECEA1HKR33I	CAPACITOR 25 V 0.33	
C67	RCUV1H101K	CAPACITOR 50 V 100P	
C68	RCUV1E103MD	CAPACITOR 25 V 0.01	
C69	RCUV1H103ZF	CAPACITOR 50 V 0.01	
C70	RCUV1E223MD	CAPACITOR 25 V 0.022	
C71	ECEA1HK010I	CAPACITOR 50 V 1	
C72	RCUV1H270JU	CAPACITOR 50 V 27P	
C73	RCUV1H472MD	CAPACITOR 50 V 0.0047	
C74	ECEA0GK470I	CAPACITOR 4 V 47	
C75	RCUV1H103ZF	CAPACITOR 50 V 0.01	
C76	RCUV1E103MD	CAPACITOR 25 V 0.01	
C77	RCUV1H103ZF	CAPACITOR 50 V 0.01	
C78	RCUV1H220KC	CAPACITOR 50 V 22P	
C79	ECEA0GK101I	CAPACITOR 4 V 100	
C80	RCUV1E103MD	CAPACITOR 25 V 0.01	
C81	ECEA1CK100I	CAPACITOR 16 V 10	

Ref. No.	Part No.	Part Name & Description	Remarks
C82	RCUV1H103ZF	CAPACITOR 50 V 0.01	
C83	RCUV1H103ZF	CAPACITOR 50 V 0.01	
C84	RCUV1E223MD	CAPACITOR 25 V 0.022	
C85	RCUV1E223MD	CAPACITOR 25 V 0.022	
C86	ECEA0JK220I	CAPACITOR 6.3V 22	
C87	RCUV1E104ZF	CAPACITOR 25 V 0.1	
C88	ECEA1CKS100I	CAPACITOR 16 V 10	
C89	ECUV1C105ZF	CAPACITOR 16 V 1	
C90	ECEA1HKS3R3I	CAPACITOR 50 V 3.3	
C91	ECEA1HK010I	CAPACITOR 50 V 1	
C92	RCUV1E153MD	CAPACITOR 25 V 0.015	
C93	ECEA0GK101I	CAPACITOR 4 V 100	
C94	RCUV1H472MD	CAPACITOR 50 V 0.0047	
C95	RCUV1H101K	CAPACITOR 50 V 100P	
C96	RCUV1E223MD	CAPACITOR 25 V 0.022	
C97	RCUV1E223MD	CAPACITOR 25 V 0.022	
C98	RCUV1H102MD	CAPACITOR 50 V 0.001	
C99	RCUV1E103MD	CAPACITOR 25 V 0.01	
C100	ECEA0GK470I	CAPACITOR 4 V 47	
C101	RCUV1E103MD	CAPACITOR 25 V 0.01	
C102	RCUV1E104ZF	CAPACITOR 25 V 0.1	
C103	RCUV1E153MD	CAPACITOR 25 V 0.015	
C104	RCUV1H220KC	CAPACITOR 50 V 22	
C105	RCUV1E153MD	CAPACITOR 25 V 0.015	
C106	RCUV1H220KC	CAPACITOR 50 V 22P	
C107	RCUV1H102MD	CAPACITOR 50 V 0.001	
C108	RCUV1H102MD	CAPACITOR 50 V 0.001	
C109	RCUV1H472MD	CAPACITOR 50 V 0.0047	
C110	ECEA0JU101E	CAPACITOR 6.3V 100	
C111	RCUV1E223MD	CAPACITOR 25 V 0.022	
C112	ECEA1CK100I	CAPACITOR 16 V 10	
C113	RCUV1E103MD	CAPACITOR 25 V 0.01	
C115	ECUV1E104MD	CAPACITOR 25 V 0.1	
C116	RCUV1H390KC	CAPACITOR 50 V 39P	
C117	ECEA0JU101E	CAPACITOR 6.3V 100	
C118	RCUV1E223MD	CAPACITOR 25 V 0.022	
C119	ECEA1AKS220I	CAPACITOR 10 V 22	
C121	RCUV1E104ZF	CAPACITOR 25 V 0.1	
C122	RCUV1E223MD	CAPACITOR 25 V 0.022	
C123	ECEA1AU471E	CAPACITOR 10 V 470	
C124	RCUV1H103ZF	CAPACITOR 50 V 0.01	
C125	ECUV1E104MD	CAPACITOR 25 V 0.1	
C126	ECEA1HK010I	CAPACITOR 50 V 1	
C127	ECEA1EK4R7I	CAPACITOR 25 V 4.7	
C128	RCUV1H103ZF	CAPACITOR 50 V 0.01	
C129	ECEA1AU221E	CAPACITOR 10 V 220	
C130	RCUV1H681K	CAPACITOR 50 V 680P	
C131	ECUV1E104MD	CAPACITOR 25 V 0.1	
C132	ECUV1E333MD	CAPACITOR 25 V 0.033	
C133	RCUV1H103ZF	CAPACITOR 50 V 0.01	
C135	RCUV1H100DU	CAPACITOR 50 V 10P	
C136	RCUV1H330KC	CAPACITOR 50 V 33P	

Ref. No.	Part No.	Part Name & Description	Remarks
C137	RCUV1E104ZF	CAPACITOR 25 V 0.1	
C201	ECUV1E104MD	CAPACITOR 25 V 0.1	
C202	ECUV1E104MD	CAPACITOR 25 V 0.1	
C203	RCUV1H103ZF	CAPACITOR 50 V 0.01	
C204	RCUV1H103ZF	CAPACITOR 50 V 0.01	
C206	RCUV1H103ZF	CAPACITOR 50 V 0.01	
C207	ECEA1CKS100	CAPACITOR 16 V 10	
C208	ECEA1CKS100	CAPACITOR 16 V 10	
C211	RCUV1H103ZF	CAPACITOR 50 V 0.01	
C212	RCUV1H102MD	CAPACITOR 50 V 0.001	
C213	RCUV1H102MD	CAPACITOR 50 V 0.001	
C214	RCUV1H102MD	CAPACITOR 50 V 0.001	
C215	RCUV1H102MD	CAPACITOR 50 V 0.001	
C216	RCUV1H470KC	CAPACITOR 50 V 47P	
C219	ECEA0GK101	CAPACITOR 4 V 100	
C220	RCUV1H103ZF	CAPACITOR 50 V 0.01	
C221	RCUV1H102MD	CAPACITOR 50 V 0.001	
C222	ECEA1CKS100	CAPACITOR 16 V 10	
C223	RCUV1H102MD	CAPACITOR 50 V 0.001	
C224	ECQV1H105JZ	CAPACITOR 50 V 0.1	
C225	RCUV1E103MD	CAPACITOR 25 V 0.01	
C226	RCUV1H103ZF	CAPACITOR 50 V 0.01	
C227	ECEA1CKS100	CAPACITOR 16 V 10	
C228	RCUV1E223ZF	CAPACITOR 25 V 0.022	
C229	RCUV1H050DC	CAPACITOR 50 V 5P	
C230	ECST1AY105RR	CAPACITOR 10 V 1	
C231	ECST1AC106R	CAPACITOR 10 V 10	
C232	RCUV1H103ZF	CAPACITOR 50 V 0.01	
C233	RCUV1E103MD	CAPACITOR 25 V 0.01	
C234	RCUV1E103MD	CAPACITOR 25 V 0.01	
C235	RCUV1H102MD	CAPACITOR 50 V 0.001	
C236	RCUV1H102MD	CAPACITOR 50 V 0.001	
C237	ECEA0GKK220	CAPACITOR 4 V 22	
C238	ECUV1E224ZF	CAPACITOR 25 V 0.22	
C239	ECEA0GKK220	CAPACITOR 4 V 22	
C240	RCUV1H102MD	CAPACITOR 50 V 0.001	
C242	RCBC1C103NYY	CAPACITOR 16 V 0.01	
C243	RCUV1H102MD	CAPACITOR 50 V 0.001	

Printed by: Schaltungsdienst Lange, Berlin (GERMANY)

PANA-06636

ORDER NO. AD9003058A2

Service Manual

Radio

FM-LW-MW-SW ALL BAND RECEIVER

RF-B65DA

Color

(K)	Black Type

- Please file and use this Service Manual together with the service manual for Model No. RF-B65D Order No. AD8902015C8.
- This Service Manual indicates the main differences between; Original RF-B65D (EG) and RF-B65DA (EG).

Area

Country Code	Area	Color
(EG)	F.R. Germany	(K)

CHANGES

■ SPECIFICATIONS

Frequency Range: SW; 1.615~26.1 kHz → Frequency Range: **SW; 1.615~29.999 kHz**

RF-B65D (EG) (Original) → **RF-B65DA (EG)**

■ REPLACEMENT PARTS LIST

Ref. No.	Description	Part Number		Remarks
		RF-B65D (EG) (Original)	**RF-B65DA (EG)**	
DIODES				
D17	DIODE	MA4051LRA	**MA4047HRA**	
COILS				
L27	ANT. COIL	RLF6019-0	**RLF6D19-0**	
TRANSFORMER				
T4	TRANSFORMER	RLI3A4-M	**RLI3A001-M**	
T5	TRANSFORMER	RLI3A4-M	**RLI3A001-M**	
RESISTOR				
R48	RESISTOR (1/10 W, 470)	RRJ6GCJ101TE	**RRJ6GCJ471TE**	
R87	RESISTOR (1/10 W, 220)	RRJ6GCJ471TE	**RRJ6GCJ221TE**	
R259	RESISTOR (1/10 W, 22 K)	——	**RRJ6GCJ223TE**	Added
R292	DESISTOR (1/10 W, 22 K)	RRJ6GCJ223TE	——	Deleted
CABINET AND CHASSIS				
3	REAR CABINET ASS'Y	RYFFB65DEG	**RYFFB65DAEG**	
4	STAND	RKL30ZA	**RKL30ZA-0**	
17	SCREW	XSHR17+2FZ	**XSHR17+3**	
19	TERMINAL	RJC3F0010ZC	**RJC30010ZC**	
41	SOCKET	RJSS4L4ZA-X	**RJS4L4ZA-X**	
83	FRONT CABINET ASS'Y	RYMFB65DEG	**RYMFB65DAEG**	
ACCESSORIES				
A4	INSTRUCTION MANUAL	RQT0046B	**RQT0535-E**	
A5	MEMORY CHANNEL SHEET	RQX9436YA	**RQX9412ZA**	
A6	SHORT WAVE GUIDE	RQX9454ZA	——	Deleted
PACKING MATERIAL				
P3	SLEEVE	RPK0032	**RPK0163**	

Panasonic

Matsushita Electric Industrial Co., Ltd.
Central P.O. Box 288, Osaka 530-91, Japan

- In the service manual for model RF-B65D, the part numbers of the resistor and capacitor below are wrong. They should be corrected as shown. The Schematic Diagram and Circuit Board and Wiring Connection Diagram are correct.

Ref. No.	Description	Part Number		Remarks
		RF-B65D (EG) (Original)	**RF-B65DA (EG)**	
RESISTOR				
R148	RESISTOR (1/10 W, 220)	——	**RRJ6GCJ221TE**	
CAPACITOR				
C208	CAPACITOR (50 V, 1)	ECEA1CKS100	**ECEA1HKS010**	

SCHEMATIC DIAGRAM

- for LCD circuit section (Page 7)

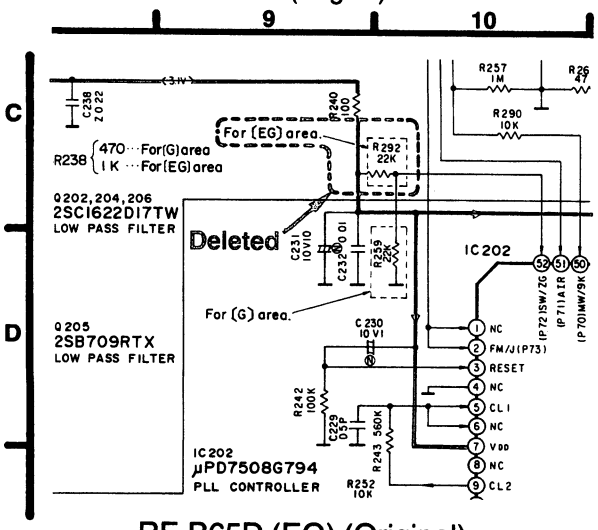

RF-B65D (EG) (Original)

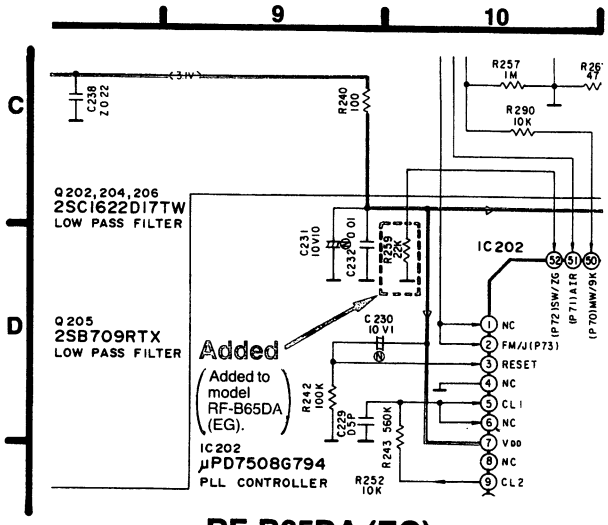

RF-B65DA (EG)

CIRCUIT BOARD AND WIRING CONNECTION DIAGRAM (Page 14)

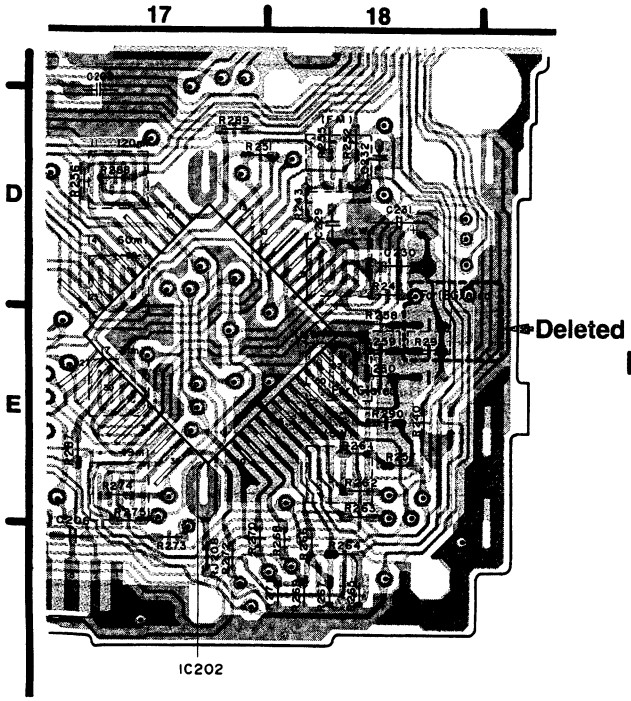

RF-B65D (EG) (Original)

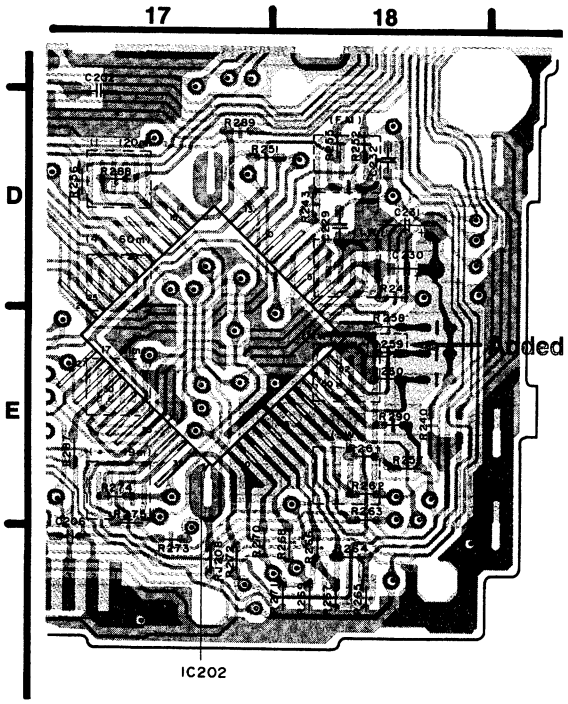

RF-B65DA (EG)

MEASUREMENTS AND ADJUSTMENTS (Page 17)

■ CLOCK ALIGNMENT

	BAND	FREQUENCY DISPLAY SETTING	FREQUENCY COUNTER	ADJUSTMENT (Refer to Fig. 5)	REMARKS
(16)	SW	29,999 MHz...(G) 26,100 MHz...(EG) ⇧ Changed	TP5...(+) TP6...(−)	CT201	Adjust the frequencies according to room temperature.

Room Temperature	Area	Frequency
8°C≦t<22°C	(EG)	81,945000 MHz±300 Hz
	(G)	85,844000 MHz±300 Hz
22°C≦t<26°C	(EG)	81,944800 MHz±300 Hz
	(G)	85,843800 MHz±300 Hz
26°C≦t<30°C	(EG)	81,944500 MHz±300 Hz
	(G)	85,843500 MHz±300 Hz
30°C≦t<33°C	(EG)	81,944100 MHz±300 Hz
	(G)	85,843100 MHz±300 Hz

RF-B65D (EG) (Original)

■ CLOCK ALIGNMENT

	BAND	FREQUENCY DISPLAY SETTING	FREQUENCY COUNTER	ADJUSTMENT (Refer to Fig. 5)	REMARKS
(16)	SW	29,999 MHz	TP5...(+) TP6...(−)	CT201	Adjust the frequencies according to room temperature.

Room Temperature	Frequency
8°C≦t<22°C	85.844000 MHz ±300 Hz
22°C≦t<26°C	85.843800 MHz ±300 Hz
26°C≦t<30°C	85.843500 MHz ±300 Hz
30°C≦t<33°C	85.843100 MHz ±300 Hz

RF-B65DA (EG)